EA990G5 10-30kVA (3/3)

Maintenance Manual

Prepared by Wu Zhifei / 20220830

Checked by Luo Changsheng / 20220831

Approved by Yang Lin / 20220831

EAST GROUP CO., LTD.

Preface

General

This document provides maintenance requirement for high frequency three-input single-output 6-20KVA products, including safety precautions for maintenance, product description, description on internal structure, description on composition of single boards, main components of single boards, description on main functions, fault removal flow, replacement of single boards, maintenance of single boards, and commissioning after maintenance, etc., to help an engineer to provide technical support and maintenance service for three-input single-output 6-20K products.

User of document

This document (manual) is mainly applicable for the following engineers:

Technical support engineer

Maintenance engineer

Revision history

The revision history provides description on each document upgrade. The latest version of document includes the upgraded content of all previous versions.

Document version: V01 (15 AUG 2014)

Formally issued for first time

Content

1 Safety precautions

1.1 Hazards

1.As dangerous voltage exists in the UPS and the battery holder, installation and maintenance are only completed by a professional engineer holding professional electrician qualification of the company or authorized by the company.

2.Operators and maintainers, and professional technicians should receive full training on safe use and equipment maintenance and work on the equipment after enough precautionary measures are taken and personal safety equipment is used.

3.As the UPS is connected with the battery, voltage may exist on its output end even if it is not connected with AC mains supply.

4.When the UPS is moved or rewired, the inputs, such as mains supply, the battery, etc., must be disconnected, corresponding operation may be performed after the UPS powers down fully (more than 10min), and otherwise the voltage may exist on its output end.

5.Before use, the UPS is reliably earthed to ensure personal safety and the normal use of the UPS.

6.When the UPS is maintained, the maintainer must wear insulated shoes and use insulated tools.

7.If temperature and humidity exceeds the limit value specified in the user manual, do not operate the equipment.

8.Before maintenance of the UPS, all inputs and outputs of the UPS (including battery input) must be disconnected.

9.Do not place the battery in fire to avoid explosion and endangering personal safety.

10.Do not stop the protector and ignore warnings, cautions and precautionary measures provided in the manual and equipment nameplate.

1.2 Warning

1.Do not open the battery cover or damage the battery. If you are exposed to electrolyte, immediately wash with plenty of clear water and seek medical advice.

2.Remove watch, ring and other metal article, wear insulating gloves and use the tools with insulated handle during work on the battery.

3.During equipment operation, make sure that all sides and internal panels are securely fixed and front door is closed.

2 Description of model

2.1 Description of EA990G5 10-30kVA serial model

Our EA990G5 10-30kVA series models are divided into tower type and rack type. The power level is 10/15/20/30KVA and the output power factor is 1.0. It can realize parallel operation of up to 4 units, provide redundant power supply, and provide stable and reliable power supply for customer loads.

Table 2-1 EA990G5 10-30kVA serial model

Component	Model	Specification	Note
UPS	10kH	10kVA Long-delay Mode(Tower)	
UPS	10kS	10kVA Standard Mode(Tower)	with ±10 12V/7AH internal
UPS	10kHRT	10kVA Long-delay Mode(Rack)	
UPS	15kH	15kVA Long-delay Mode(Tower)	
UPS	15kS	15kVA Standard Mode(Tower)	with ±20 12V/7AH internal
UPS	15kHRT	15kVA Long-delay Mode(Rack)	
UPS	20kH	20kVA Long-delay Mode(Tower)	
UPS	20kS	20kVA Standard Mode(Tower)	with ±20 12V/7AH internal
UPS	20kHRT	20kVA Long-delay Mode(Rack)	
UPS	30kH	30kVA Long-delay Mode(Tower)	
UPS	30kS	30kVA Standard Mode(Tower)	with two string ±15 12V/7AH internal
UPS	30kHRT	30kVA Long-delay Mode(Rack)	

Table 2-2 Accessories of EA990G5 10-30kVA serial model

SNMP card/protocol conversion card(including packaging materials)	iDA-ST200P	Remote network monitoring can be realized (RJ45 interface, as a protocol conversion card, an adapter cable is required) The built-in card is directly inserted into the card slot;
SNMP card/protocol conversion card(excluding packaging materials)	iDA-ST200P	Remote network monitoring can be realized (RJ45 interface, as a protocol conversion card, an adapter cable is required) The built-in card is directly inserted into the card slot;
SMS cat	iDM-MDM200E	This device needs to be used with an SNMP card; When the SNMP card detects that the UPS has an alarm, the SNMP card can control the SMS modem to send the alarm content to the mobile phone of the designated user; It does not contain a SIM card and needs to be purchased separately. At the same time, it only applies to standard SIM cards of China Mobile and China Unicom.
SMS alarm	iDM-ALM200P	The alarm information of the UPS can be automatically sent to the mobile phone of the designated user; It does not contain a SIM card and needs to be purchased separately. At the same time, it only applies to standard SIM cards of China Mobile and China Unicom.
WIFI module	iDM-SPW202P	WIFI--glue stick antenna; you can connect the WIFIF module through a mobile phone or computer to check the running status and parameters of the UPS.
GPRS module	iDM-SPG203P	GPRS - glue stick antenna; you can connect the GPRS module

(external, DB9)		through a mobile phone or computer to check the running status and parameters of the UPS.

2.2 Appearance introduction of EA990G5 10-30kVA series model

The overall appearance is shown in Figures 2-1 to 2-7 below.

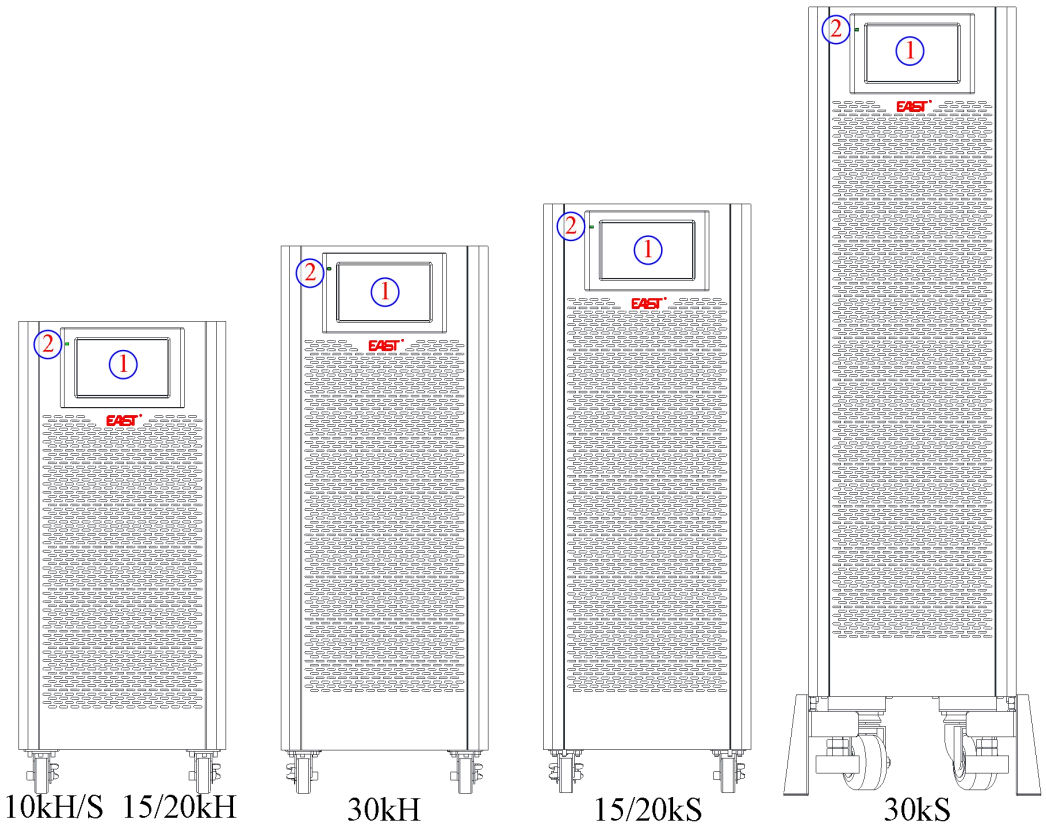

Fig.2-1 The front pannel of 10-30kVA series UPS (Tower)

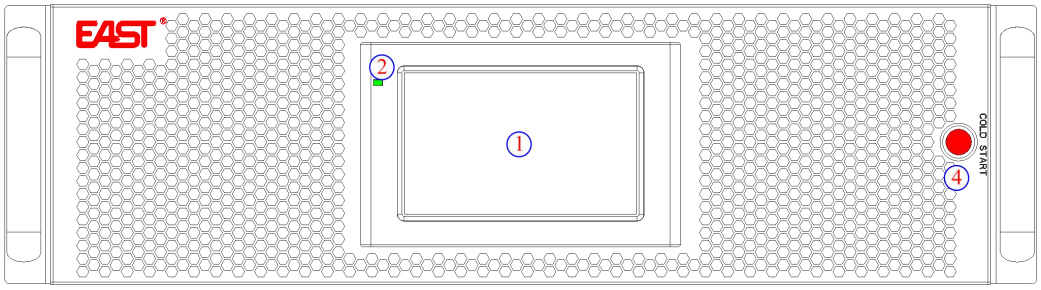

Fig.2-2 The front pannel of 10-30kVA series UPS (Rack)

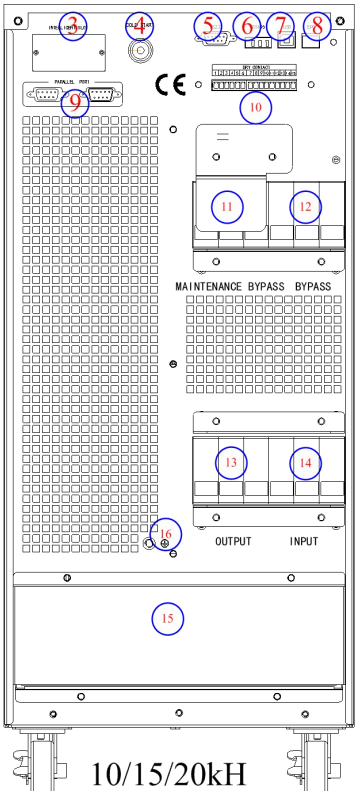

Fig.2-3 The rear pannel of 10kVA, 15kVA, 20kVA long-delay UPS (Tower)

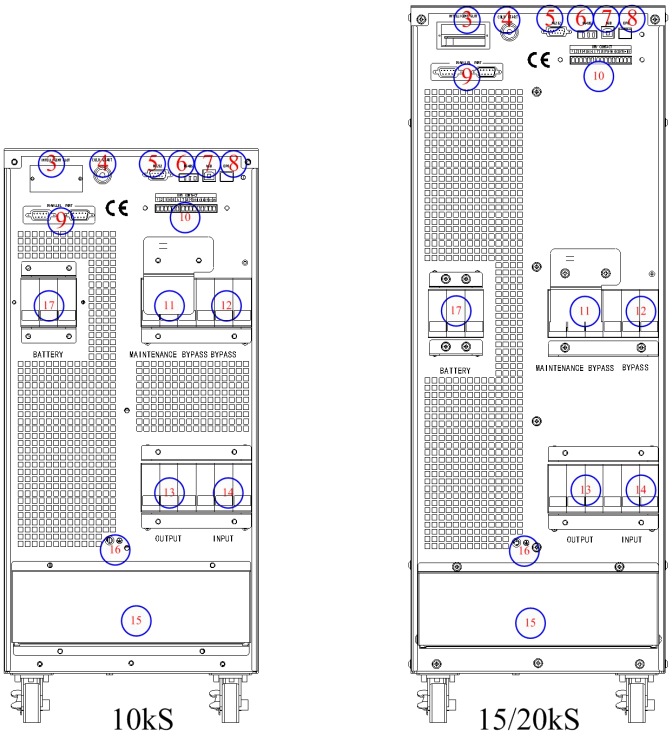

Fig.2-4 The rear pannel of 10kVA, 15kVA, 20kVA standard UPS (Tower)

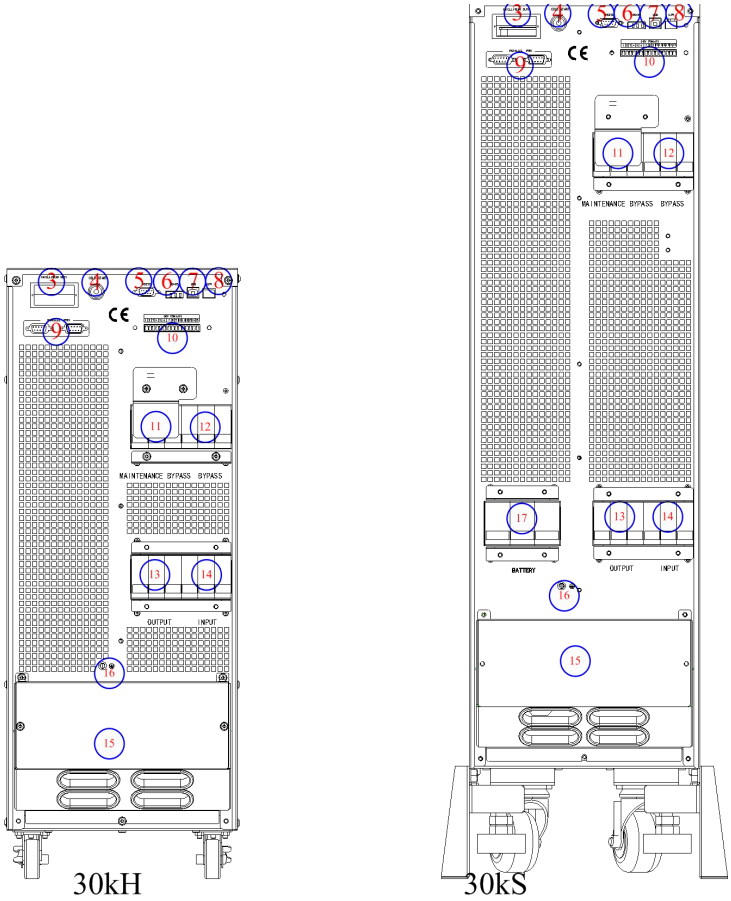

Fig.2-5 The rear pannel of 30kVA UPS (Tower)

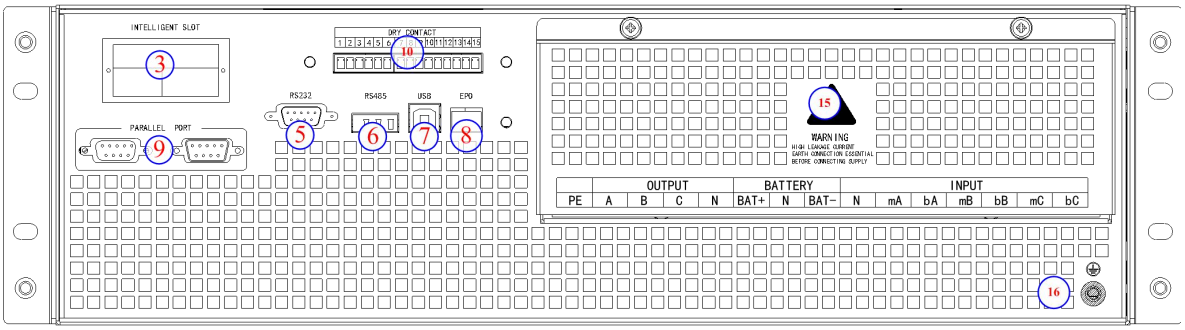

Fig.2-6 The rear pannel of 10kVA, 15kVA, 20kVA UPS (Rack)

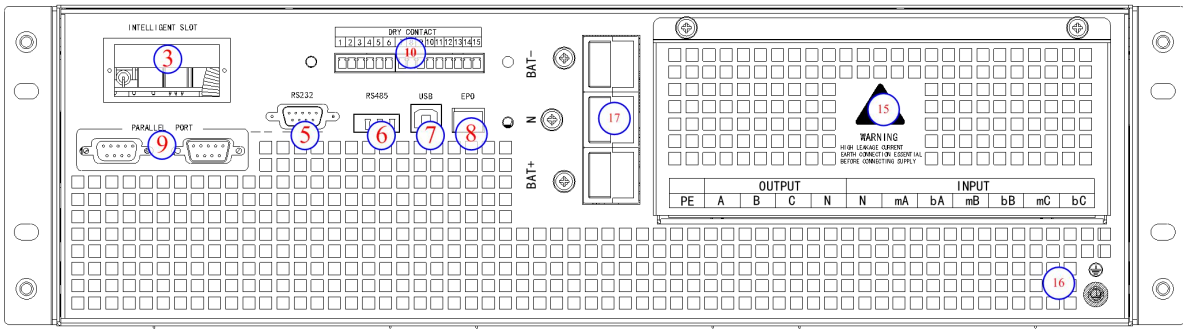

Fig.2-7 The rear pannel of 30kVA UPS (Rack)

Table 2-3 The introduction of front and rear pannel

NO.	Part name
1	LCD screen
2	LED
3	Smart card slot
4	Cold start button
5	RS232 port
6	RS485 port
7	USB port
8	EPO
9	Parallel port
10	Dry contact port
11	Maintenance Bypass Assembly
12	Bypass breaker
13	Output breaker
14	Input breaker
15	Terminal block and cover
16	PE
17	Battery breaker

2.3 The operation control LCD panel introduction of EA990G5 10-30kVA

This chapter introduces the functions and operator instructions of the operator control and display panel in detail, and provides LCD display information, including LCD display types, detailed menu information, prompt window information and UPS alarm information.

2.3.1 LCD panel for Cabinet

The structure of operator control and display panel for cabinet is shown in Fig.4-1. The operation control panel of UPS is located on the front panel of the case. By operating the LCD, the ups can be operated, controlled, and checked for all its parameters, operating status, and alarm information.

Fig.2-8 Control and display panel

LED Indicator

There are 2 LEDs on the panel to indicate the operating status and fault.The description of indicators is shown in table 2-4。

Table 2-4 Status description of indicators

Indicators	State	Description
red	Steady red	UPS fault
	Flashing red	UPS alarming
green	Steady green	Power supply mode (mains mode, bypass mode, ECO mode, etc.)
No	None	Standby status or no starting

Alarm

There are two different types of audible alarm during UPS operation, as shown in table 2-5

Table 2-5 Description of audible alarm

Alarm	Description
Intermittent alarm	when system has general alarm (for example: AC fault),
Continuous alarm	When system has serious faults (for example: hardware fault)

LCD Menu structure

The menu structure of the monitoring display interface is shown in Fig.2-9

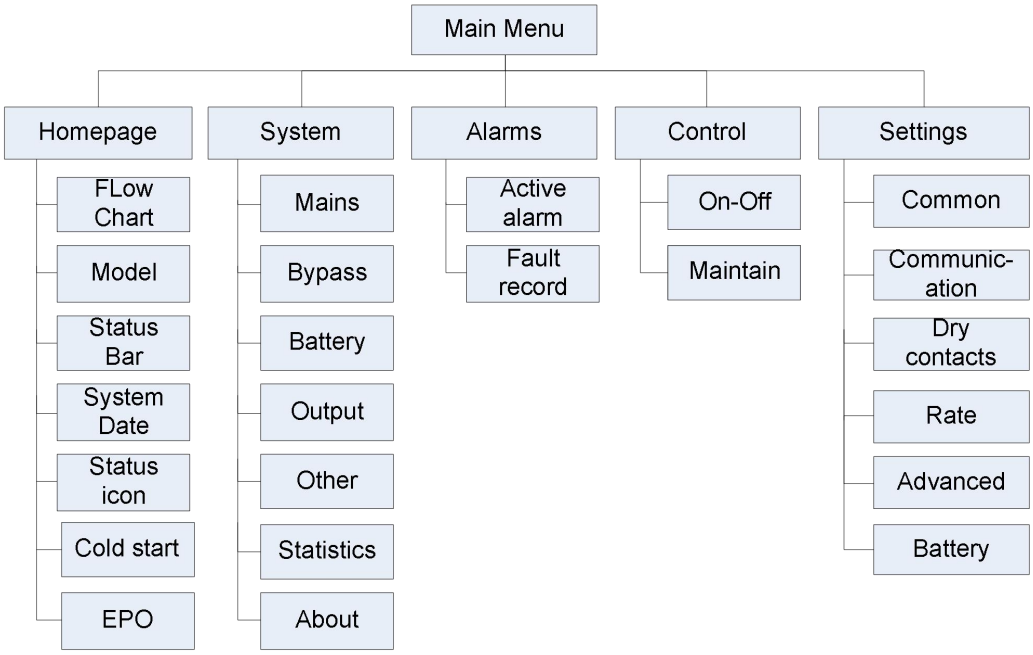

Fig.2-9 Menu

2.3.2 Home page

After the monitoring system starts self-test, the system enters the home page, following the welcome window. The home page is divided into three parts, including main menu, energy flow diagram, status bar. The home page is shown in Fig. 2-10.

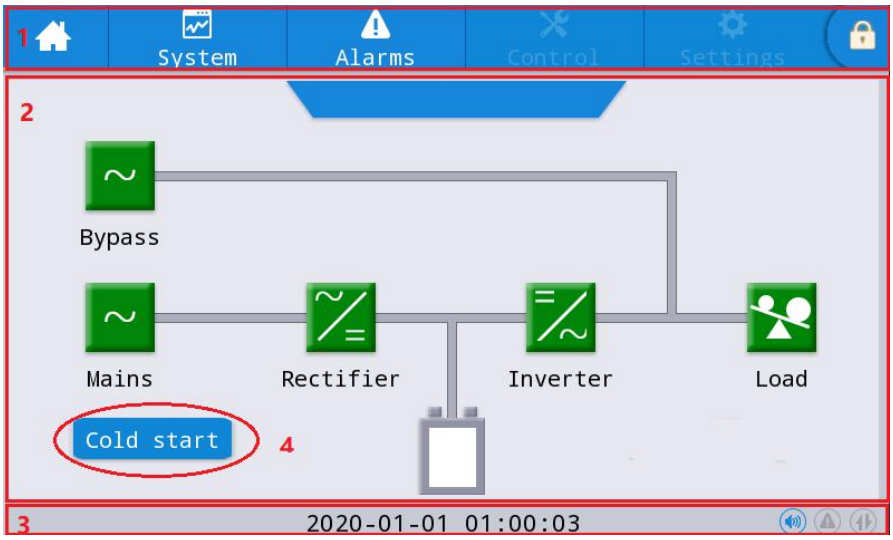

Fig. 2-10 Home page

Table 2-6 Function description of interface area

No.	Area	Function description
1	Main menu	Level 1 menu, including home page, system, alarm, control, settings, password login. The control and the settings are displayed in gray before login by password.

No.	Area	Function description
2	Energy flow diagram	Display the energy flow state of the cabinet. Click the corresponding work interface to view the status information.
3	Status bar	Display operation status, system time, buzzer status, alarm status, HMI and monitoring communication status, USB status of the cabinet.
4	Cold start	Start the UPS in battery mode. The icon will be hidden after two minutes.

Table 2-7 Description of icons in status bar

Icon	Function description
	Buzzer status, which becomes lit to indicate the buzzer enabled, and off to indicate the buzzer disabled
	Alarm status, which becomes lit to indicate an alarm, and off to indicate no alarm
	Password login/logout key. After clicking, enter user password or advanced password by the keyboard. The screen will be locked automatically.

Table 2-8 Description of password permissions

Password permissions	Default	Function description
User password	123456	Unlock On and OFF control right and the right of common settings and communication settings. It can be changed in "settings - common settings - user password".
Advanced password	Not opened	Unlock all control and setting rights. It can be used by qualified electricians only.

2.3.3 System

In the "System" information interface, the "Mains ", "Bypass ", "Battery ", "Output", "Other", "Statistics" and "About " information of the system can be inquired in the secondary menu at the left side.

Mains

The menu interface of the mains input is shown in Fig. 2-11, and displays information on three phases ABC from left to right. The interface description is shown in Table 2-9.

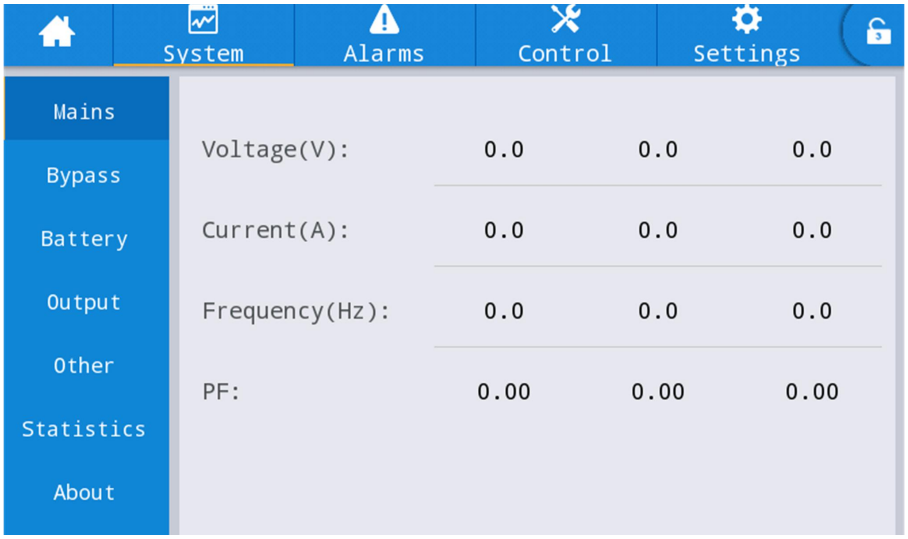

Fig. 2-11 Input interface

Table 2-9 Description of input interface

Display item	Description
Voltage (V)	Mains input phase voltage
Current (A)	Mains input phase current
Frequency (Hz)	Mains input frequency
PF	Mains input Power factor

Bypass

The menu interface of the bypass input is shown in Fig. 2-12, and the interface description is shown in Table 2-10.

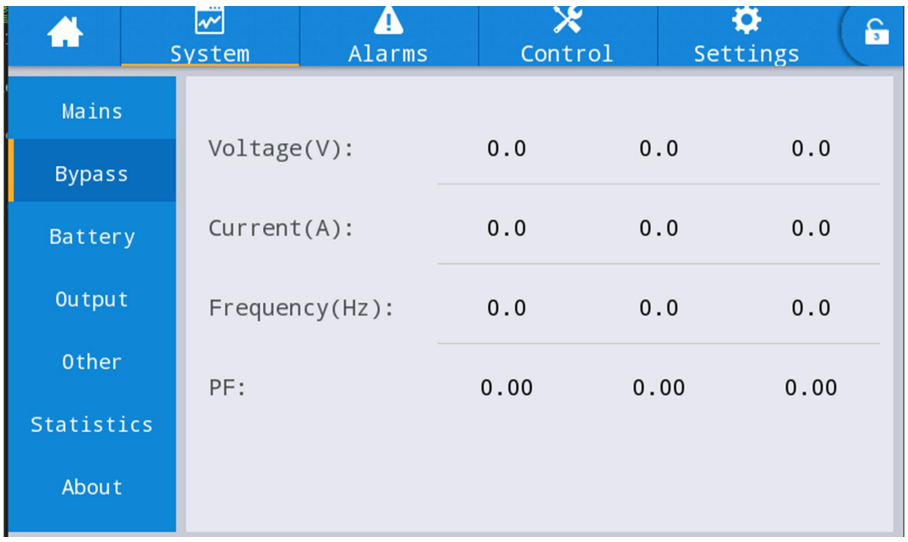

Fig. 2-12 Bypass interface

Table 2-10 Description of bypass interface

Display item	Description
Voltage (V)	Bypass input phase voltage

Display item	Description
Current (A)	Bypass input phase current
Frequency (Hz)	Bypass input frequency
PF	Bypass input Power factor

Battery

The interface menu of battery input is shown in Fig. 2-13, and the interface description is shown in Table 2-11.

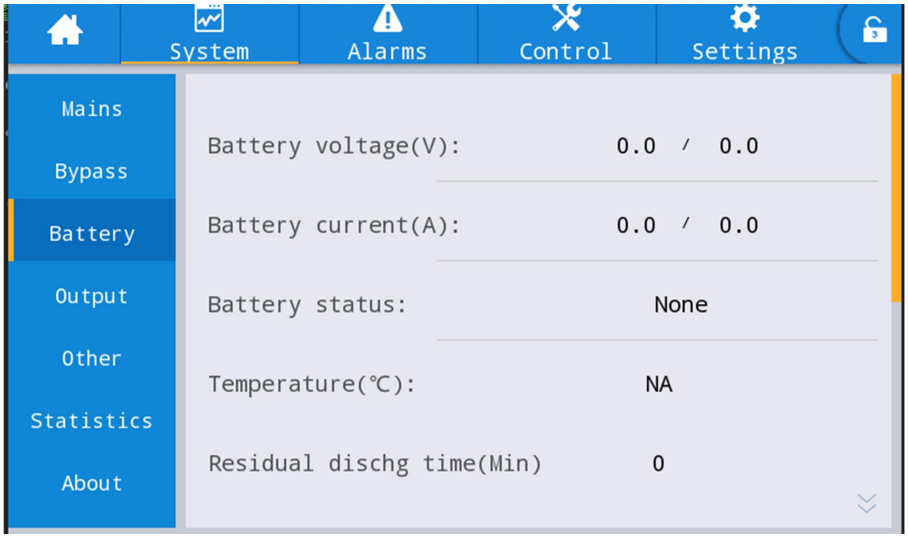

Fig. 2-13 Battery interface

Table 2-11 Description of battery interface

Display item	Description
Battery voltage (V)	Battery voltage
Battery Current (A)	Battery current
Battery status	Current battery status: idle, discharge, boost charge, floating charge, None
Temperature (℃)	Current operating temperature of battery (optional battery temperature sensor, display "NA" if not connected)
Backup time (min)	Estimated discharge time of the battery at the current load
Remaining cap. (%)	Current remaining capacity of battery

Output

The interface of output menu is shown in Fig. 2-14, and the interface description is shown in Table 2-12.

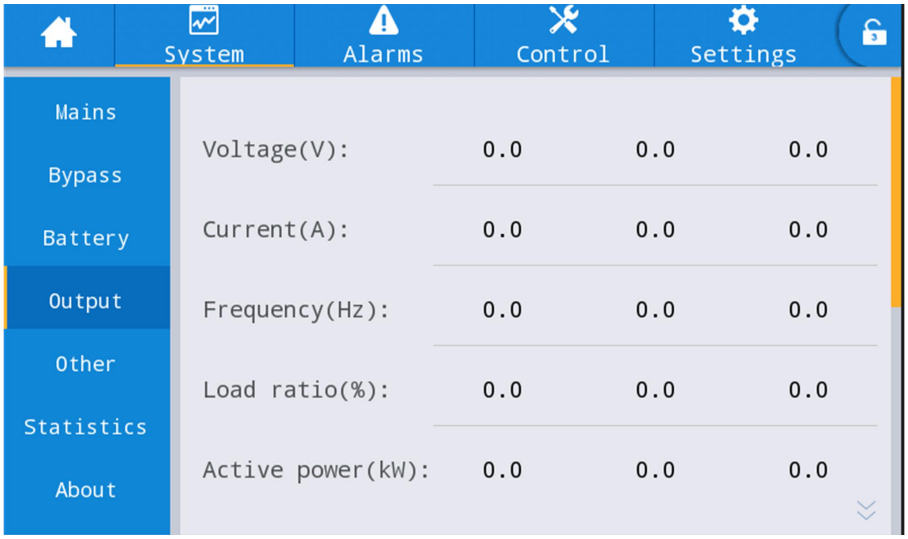

Fig. 2-14 Output interface

Table 2-12 Description of output interface

Display item	Description
Voltage (V)	AC output phase voltage.
Current (A)	AC output phase current.
Frequency (Hz)	AC output frequency.
Load ratio (%)	Load rate of each phase of the machine
Active power (kW)	Output active power of each phase of the UPS unit
Appa. pow. (kVA)	Output apparent power of each phase of the UPS unit
Reactive power(kVA)	Output reactive power of each phase of the UPS unit
PF	Output power factor of each phase of the UPS unit

Other

The interface of other menu is shown in Fig. 2-15, and the interface description is shown in Table 2-13.

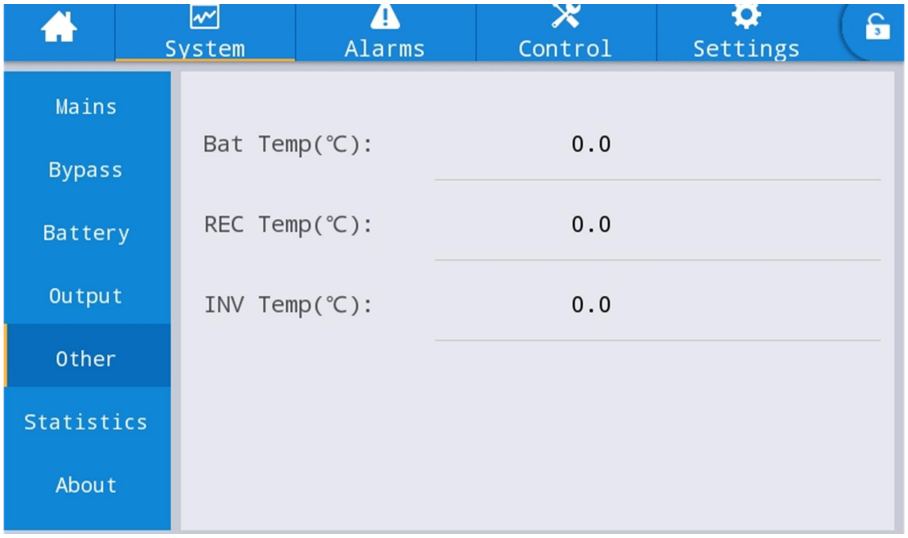

Fig. 2-15 Other interface

Table 2-13 Description of other interface

Display item	Description
PFC temperature	Rectifier temperature
INV temperature	Inverter temperature
Environmental temperature	Environmental temperature(optional battery temperature sensor, display "NA" if not connected)

Statistics

The interface of statistics menu is shown in Fig. 2-16, and the interface description is shown in Table 2-14.

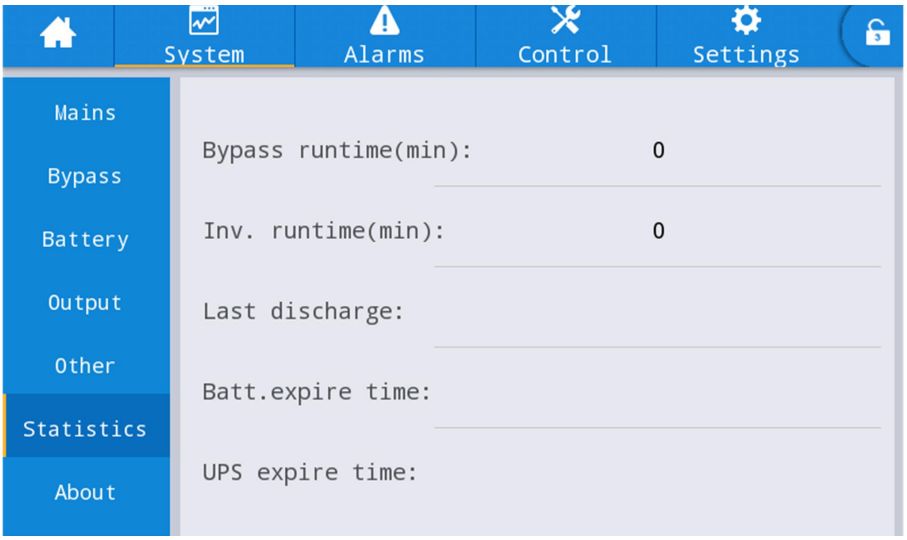

Fig. 2-16 Statistics interface

Table 2-14 Description of statistics interface

Display item	Description
Bypass runtime (min)	Accumulative operation time of UPS in bypass output status
Inv. Runtime (min)	Accumulative operation time of UPS in inverter output status
Last discharge	Date of previous discharge status of UPS
Batt. expire time	When the system time exceeds the warranty period, the status bar will prompt the warranty information of battery.
UPS expire time	When the system time exceeds the warranty period, the status bar will prompt the warranty information of main machine.

About

The interface of “About” menu is shown in Fig. 2-17, and the interface description is shown in Table 2-15.

Fig. 2-17 About interface

Table 2-15 Description of Interface

Display item	Description
S/N	Production serial number of this machine.
TEL	Contact information of after-sales service providers.
Manufacturer	Manufacturer of this machine.
Website	Website of manufacturer of this unit.
HMI version	Program version of HMI display system.
PFC1 version	Program version of power rectifier system
Inv.1 version	Program version of power inverter system

2.3.4 Alarm

In the "Alarms" information interface, you can view "Active alarm"and"Fault record "from the secondary menu in the lower left corner. Click to select the type of alarm you want to view. The interface of alarm menu is shown in Fig. 2-18.

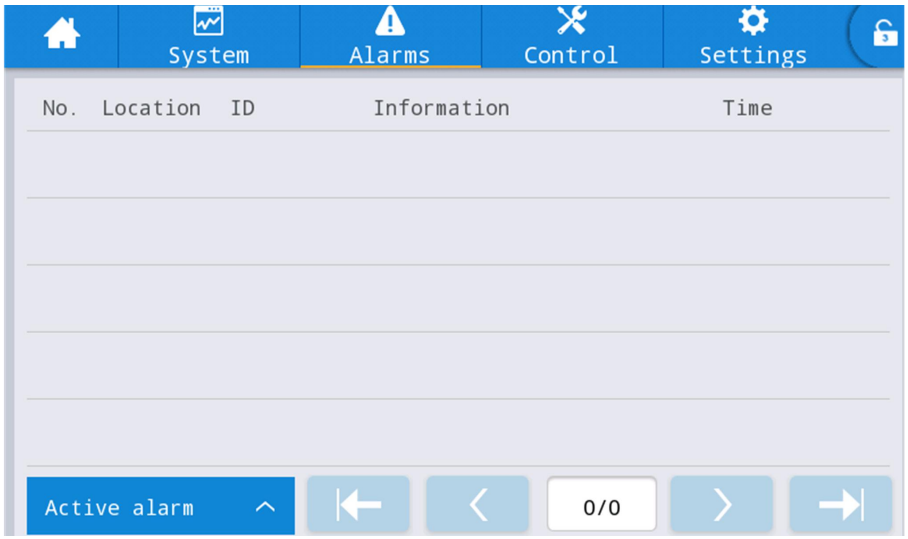

Fig. 2-18 Alarm menu interface

Active alarm

The active alarm interface displays the relevant information of the current warning of UPS system, The interface description is shown in Table 2.16.

Table 2-16 Description of active alarm interface

Display item	Description
No.	Alarm number
Location	Display the cabinet number and module number of the current alarm source.
ID	Alarm code for program analysis.
Information	Current alarm name
Time	The current alarm is the current alarm information without time display.

History records

The "history record" is divided into "Location ID ", "Information " and "Tine ", as shown in Fig.2-19, The interface description is shown in Table 2-17.

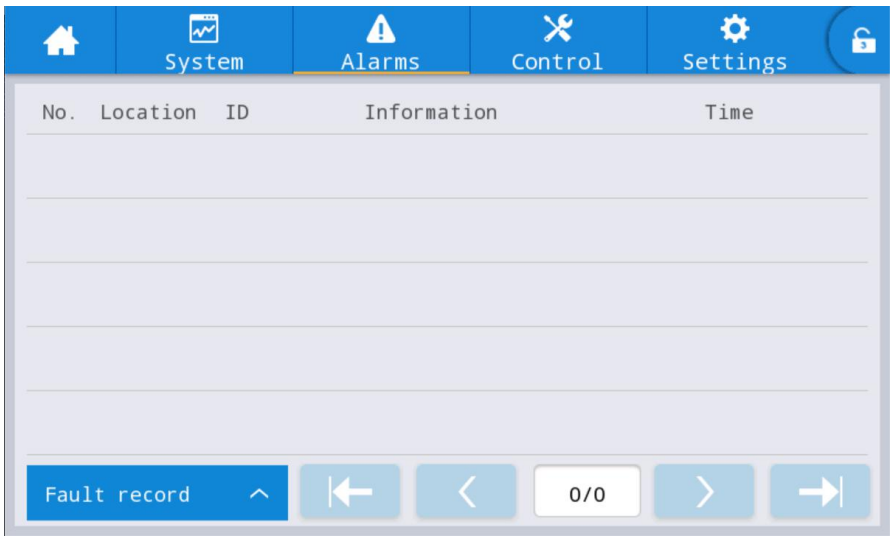

Fig.2-19

Table 2-17 Description of history record interface

Display item	Description
No.	Record number, which is listed in reverse order, that is to say the latest record is in the front.
Location	Displays the module number of the current record source.
ID	List code of fault, status or operation information for program analysis
Information	Current record name and record state (occurrence, disappearance).
Time	Record the time of occurrence or disappearance.

4.2.6 Control

In the "Control " information interface, you can select relevant operation from the left secondary menu, which contains "On-Off "and "Maintain".

On-Off

The interface of the On-Off menu is shown in Fig. 2-20, and the interface description is shown in Table 2-18.

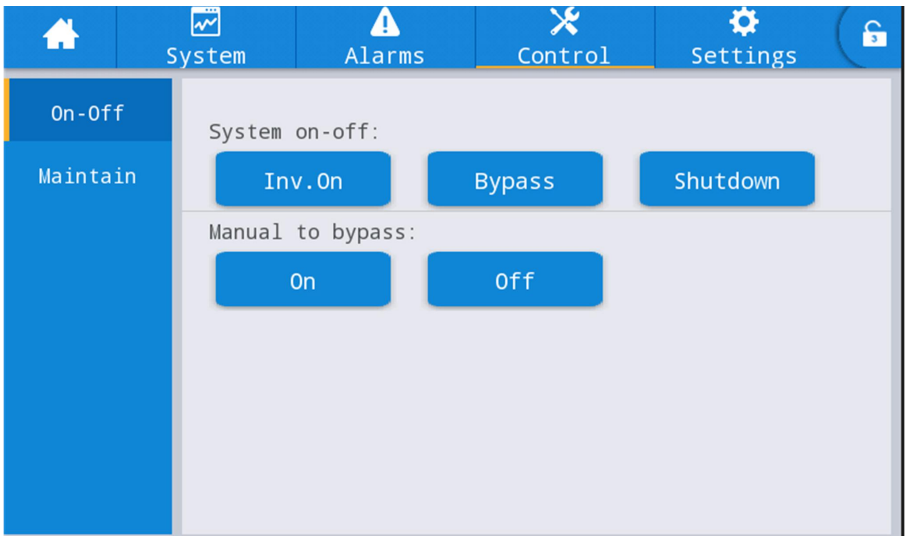

Fig. 2-20 On-Off interface

Table 2-18 Description of On-Off interface

Control item	Description
System on-off	Including “Inv.On”, “Shut to bypass” and “Shutdown”. It is gray when clicking is invalid.
Manual to bypass	Including “On” and “Off”. It is gray when clicking is invalid. If the bypass is abnormal, switching to bypass fails.

Maintenance

The interface of maintenance menu is shown in Fig. 2-21, and the interface description is shown in Table 2-19.

Fig. 2-21 Maintenance interface

Table 2-19 Description of maintenance interface

Control item	Description
Mute	Mute the buzzer
Clear history	Clear history
Faults Clear	Clear the fault
Bat Test1	UPS transfer to battery discharge mode to test if the battery is normal. Bypass must be in normal condition, the battery capacity should be above 25%.
Bat Test2	This test will lead to the battery being partly discharged to activate battery until battery voltage is low. Bypass must be in normal condition, the battery capacity should be above 25%.
Stop Bat Test	Manually Stop the test including maintenance test, capacity test

2.3.6 Settings

Common settings

The interface of common settings menu is shown in Fig. 2-22, and the interface description is shown in Table 2-20.

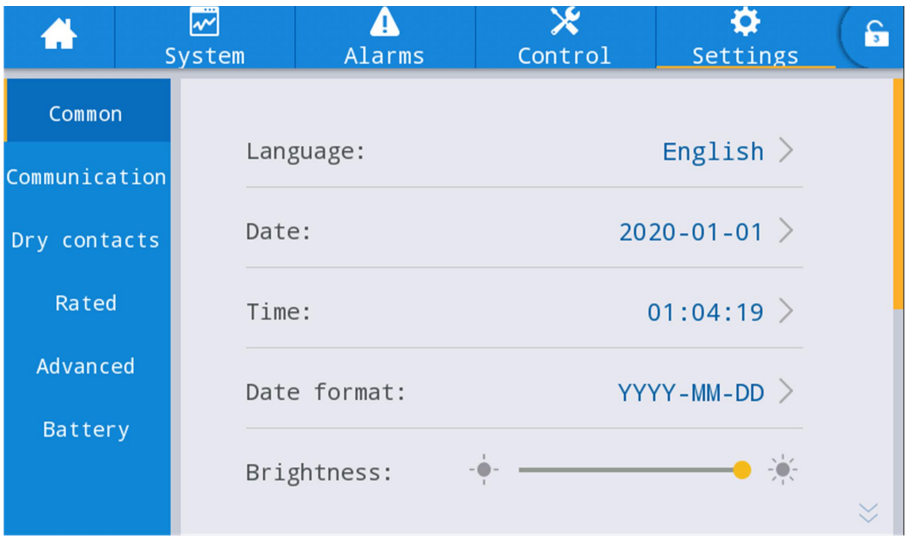

Fig. 2-22 Common setting interface

Table 2-20 Description of common setting interface

Setting item	Default	Options	Description
Language	English	English	Display in English.
YYYY-MM-DD	2016-01-01	2000-01-01~2099-12-31	Set the current date.
Time	00:00:00	00:00:00~23:59:59	Set the current time.
Date format	Y-M-D	Y-M-D, M-D-Y, D-M-Y	Support 3 formats: Y-M-D, M-D-Y, D-M-Y.
Brightness	100%	0% ~ 100%	Adjust backlight brightness by moving the slider.
Auto-lock	5 min	0 ~ 30 min	Set screen time out. 0 is set to keep the screen on.
User password	123456	0 ~ 99999999	The user can change the password, which can be set to 1-8 digits.

Communication settings

The interface of the communication setting menu is shown in Fig. 2-23, and the interface description is shown in Table 2-21.

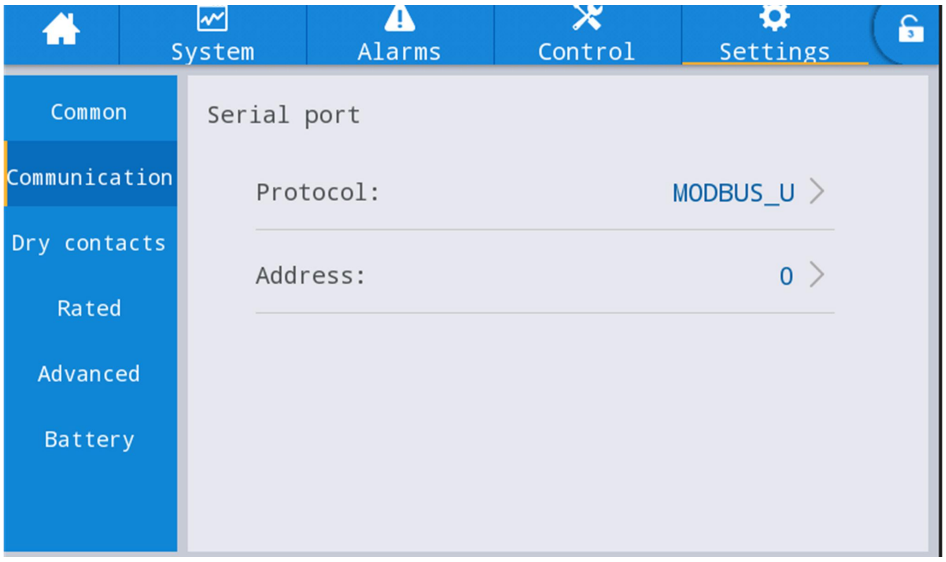

Fig. 2-23 Communication settings interface

Setting item	Default	Options	Description
Protocol	MODBUS_U	MODBUS_U, R&D MODBUS, MEGATEC	Settings such as Protocol, Address and Parity are set for serial ports, including USB interface, RS232 interface and RS485 interface. Users can make the corresponding settings according to the setting requirements of the monitoring software used, but ensure that the setting value in the monitoring software must be consistent with the value in the UPS communication settings.
Address	0	0~ 247	

Table 2-21 Description of communication settings interface

Dry contact settings

The interface of dry contact setting menu is shown in Fig. 2-24, and the interface description is shown in Table 2-22.

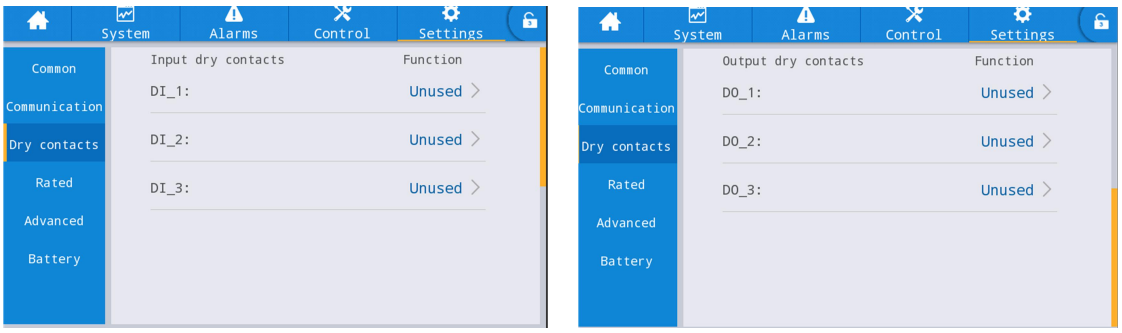

Fig. 2-24 Dry contact setting interface

Table 2-22 Description of dry contact setting interface

INTERFACE	Name	Function
Input Dry Contact DI_1 ~ DI_3	D.G.mode	Connection status of generator, Select IN_DRY1_NC
	EPO	EPO , Select IN_DRY1_NC
	BCB online	BCB on-line input (normally open), Select IN_DRY2/3_NO
	BCB status	BCB contact status, connect with the normally open signal of BCB. Select IN_DRY2/3_NO.
	INV	Transfer from the bypass to inverter
	Bypass	Transfer from the inverter to bypass
	Fault clear	Fault clear
	Batt over charge	The battery is over charging, the ups will shutdown the charger
	Low batt.volt.	The battery voltage is low, the ups will get ready to shutdown or recharge
Output Dry Contact DO_1~ DO_3	Grid Fault	Grid Fault warning
	Low.Bat.vol	The battery voltage is low
	Load on bypass	The UPS is in bypass mode
	Load on INV	The UPS is in INV mode
	Battery Mode	The UPS is in battery mode
	General Alarm	General Alarm
	Output over load	Output over load
	BCB drive	BCB contact drive, need +15V voltage，20mA drive signal

Rate parameters

The interface of the rate parameters menu is shown in Fig. 2-25, and the interface description is shown in Table 2-23.

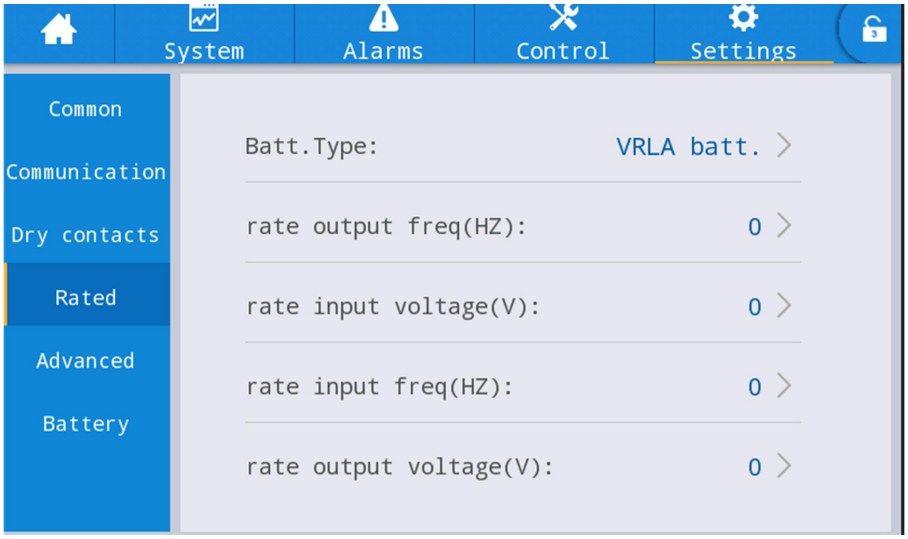

Fig. 2-25 Bypass parameters interface

Table 2-23 Description of bypass parameters interface

Setting item	Default	Options	Description
Batt.Type	VRLA	Lithium/VRLA	Battery type: VRLA battery and Lithium battery, The supported lithium battery type is 3.2 V lithium iron phosphate battery.
Rate output freq	50	50/60	Rate output frequence
Rate output voltage	220	208/220/230/240	Rate output voltage
Rate input freq	50	50/60	Rate input frequence
Rate input voltage	220	208/220/230/240	Rate input voltage

Advanced parameters

The interface of advanced parameters menu is shown in Fig. 2-26, and the interface description is shown in Table 2-24.

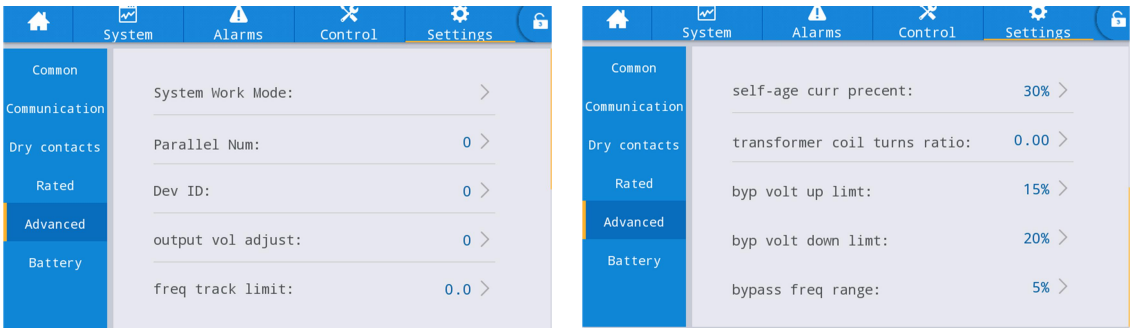

Fig. 2-26 Advanced parameters interface

Table 2-24 Description of advanced parameters interface

Setting item	Default	Options	Description
Working mode	Normal	Normal/ECO/Self-age/ Parallel mode	Select the corresponding working mode according to user needs. It is normal working mode in general.
Parallel Number	1	1 ~ 4	Set according to the actual frame numbers of the UPS system installed by the user.
Dev ID	1	1 ~ 16	Set device parallel ID
Output voltage adjust	0	-5.0 ~ 5.0	Fine tune the output voltage according to the customer's field power distribution.
Freq track limit	±3Hz	±0.5Hz ~ ±5Hz	Settable, ±0.5Hz ~ ±5Hz, default ±3Hz
Self-age curr precent (%)	80	30 ~ 100	It is percentage of output current in rated output current in self-aging mode.
Transformer coil turns ratio	1	settable	Set the output transformer coil turns ratio.
Byp volt up limt	+15%	+10%, +15%, +20%, +25%	Upper limit: +10%, +15%, +20%, +25%
Byp volt down limt	-20%	-10%, -15%, -20%, -30%, -40%	Lower limit: -10%, -15%, -20%, -30%, -40%
bypass frq range	±5.0	±1.0/±2.0/±3.0/±4.0/±5.0/±6.0	Note that the bypass frequency range cannot be less than the ECO frequency range.

Battery parameters

The interface of battery parameters menu is shown in Fig. 2-27, and the interface description is shown in Table 2-25.

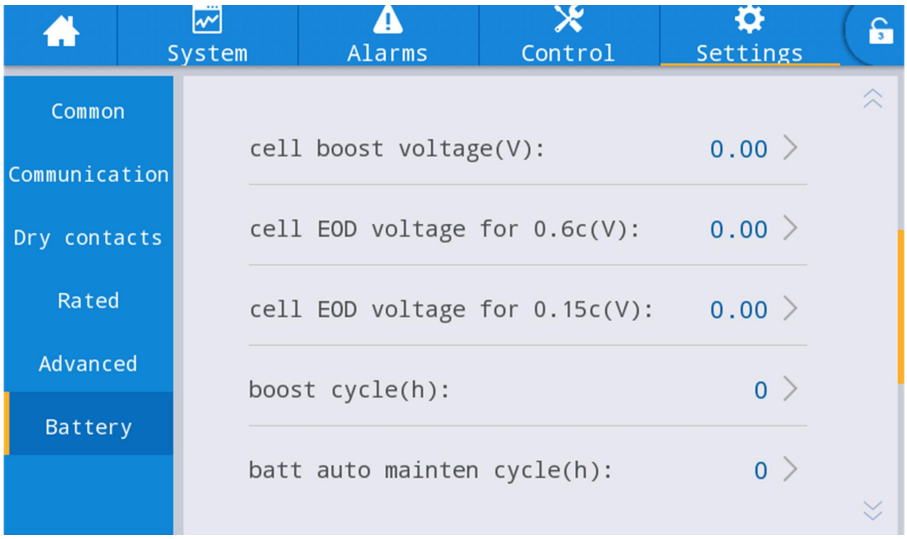

Fig. 2-27 Battery parameters interface

Table 2-25 Description of battery parameters interface

Setting item	Default	Options	Description
Battery number	40	settable	et according to the total number of battery cells connected to the UPS system, each conventional lead-acid battery has 6 battery cells, for example, 32 batteries × 6=192 battery cells.
Battery capacity (Ah)	18	settable	Single battery capacity connected to the UPS system.
Charge curr.limit(A)	1	10	Set according to the needs，20% * UPS capacity limited.
Boost time limit	2	1-48	Set according to the needs.
Cell float voltage	2.25	2.10 ~ 2.35	Charging voltage of single cells under floating charge condition.
Cell boost voltage	2.25	2.20~2.45	Charging voltage of single cells under boost charge condition.
Cell EOD voltage for 0.6C	1.65	1.6~1.85	Set according to the needs.
Cell EOD voltage for 0.15C	1.75	1.65~1.9	Set according to the needs.
Boost cycle	1440	1~3000h	Set according to the needs.
Batt auto mainten cycle	2880	720~30000h	This test will lead to the battery being partly discharged to activate battery until battery voltage is low. Bypass must be in normal condition, the battery capacity should be above 25%.
Batt volt low coefficent	1.1	1.05~1.25	Set according to the needs.
Batt mainten cycle	3000	0-3000d	Set according to the actual battery replacement time for the users.

3 Internal Introduction

3.1 System Configuration

The Tower UPS is configured by the following part: Rectifier, Charger, Inverter, Static Switch and Manual Bypass Switch. One or several battery strings should be installed to provide backup energy once the utility fails. The UPS structure is shown in Fig. 3-1.

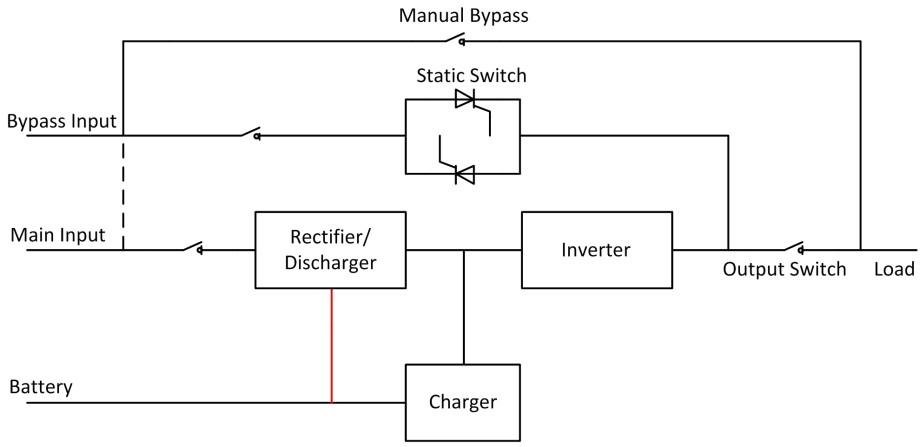

Fig.3-1 UPS Configuration

3.1.1 Operation Mode

The UPS is an on-line, double-conversion UPS that permits operation in the following modes:Normal mode、Battery mode、Bypass mode、Maintenance mode (manual bypass)、ECO mode、Auto-restart mode、Frequency Converter mode、Self Aging Mode

Normal Mode

The inverter of power modules continuously supply the critical AC load. The rectifier/charger derives power from the AC mains input source and supplies DC power to the inverter while simultaneously FLOAT or BOOST charging its associated backup battery.

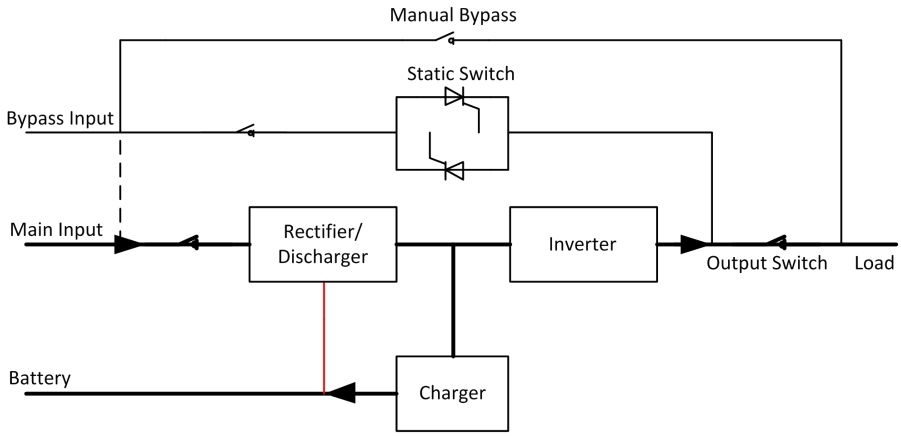

Fig 3-2 Normal mode operation diagram

Battery Mode

Upon failure of the AC mains input power, the inverter of power modules, which obtain power from the battery, supply the critical AC load. There is no interruption in power to the critical load upon failure. After restoration of the AC mains input power, the “Normal mode” operation will continue automatically without the necessity of user intervention.

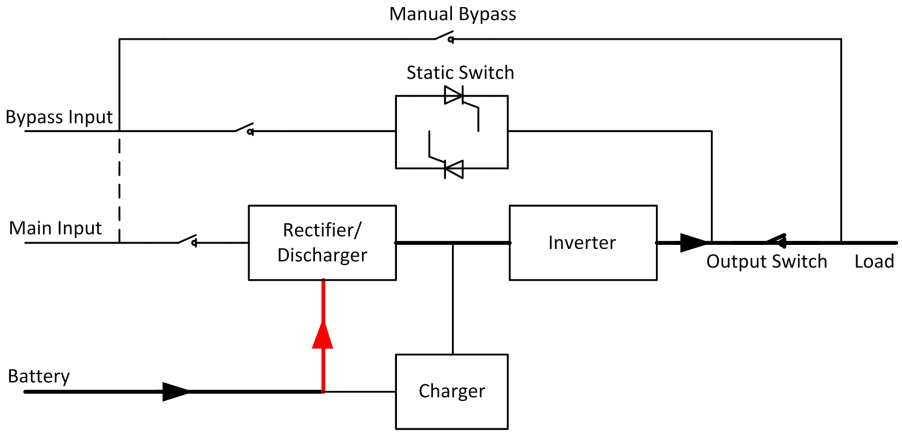

Fig 3-3 Battery mode operation diagram

Bypass Mode

If the inverter overload capacity is exceeded under Normal mode, or if the inverter becomes unavailable for any reason, the static transfer switch will perform a transfer of the load from the inverter to the bypass source, with no interruption in power to the critical AC load. Should the inverter be asynchronous with the bypass, the static switch will perform a transfer of the load from the inverter to the bypass with power interruption to the load. This is to avoid large cross currents due to the paralleling of unsynchronized AC sources. This interruption is programmable but typically set to be less than 3/4 of an electrical cycle, e.g., less than 15ms (50Hz) or less than 12.5ms (60Hz). The action of transfer/re-transfer can also be done by the command through monitor.

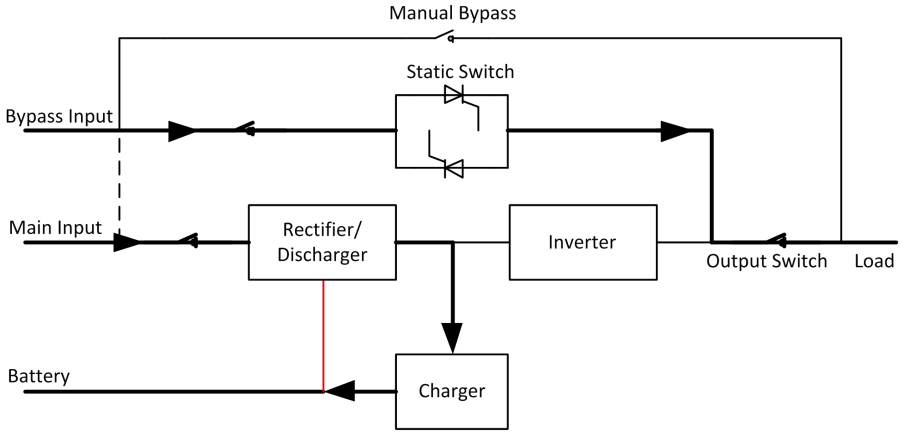

Fig. 2-4 Bypass mode operation diagram

Maintenance Mode (Manual Bypass)

A manual bypass switch is available to ensure continuity of supply to the critical load when the UPS becomes unavailable e.g. during a maintenance procedure. (As shown in Fig.3-5).

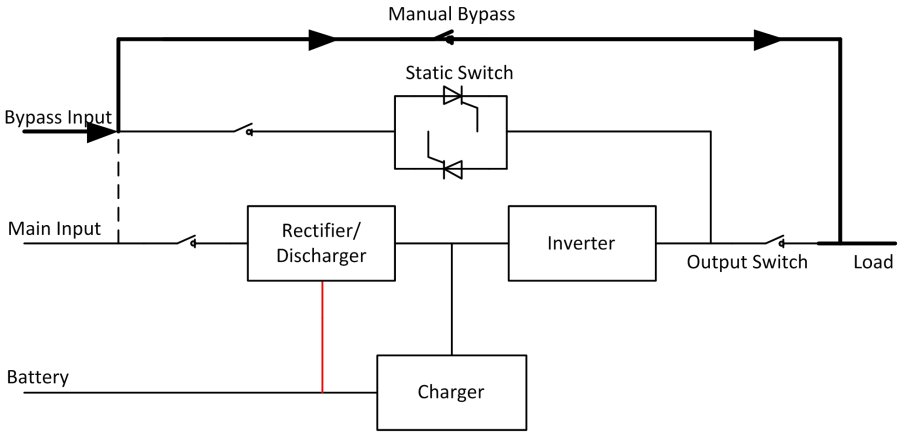

Fig .3-5 Maintenance mode operation diagram

Danger

During Maintenance mode, dangerous voltages are present on the terminal of input, output and neutral, even with the LCD turned off.

ECO Mode

To improve system efficiency, UPS rack system works in Bypass mode at normal time, and inverter is standby. When the utility fails, The UPS transfers to Battery Mode and the inverter powers the loads.

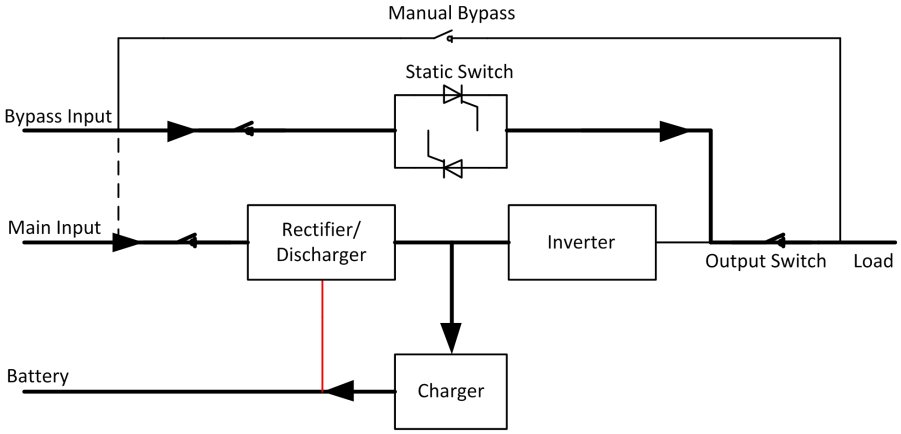

Fig.3-6 ECO Mode operation diagram

Note

There is a short interruption time (less than 10ms) when transfer from ECO mode to battery mode, it must be sure that the interruption has no effect on loads.

Auto-restart Mode

The battery may become exhausted following an extended AC mains failure. The inverter shuts down when the battery reaches the End of Discharge Voltage (EOD). The UPS may be programmed to “System Auto Start Mode after EOD”. The system starts after a delay time when the AC mains input recovers. The mode and the delay time are programmed by the commissioning engineer.

Frequency Converter Mode

By setting the UPS to Frequency Converter mode, the UPS could present a stable output of fixed frequency (50 or 60Hz), and the bypass static switch is not available.

Self Aging Mode

If users want to burn in UPS without load, could set the UPS as Self Aging Mode, in this mode, the current flow through rectifier, inverter, and back to input through bypass. It needs only 5% loss to burn in UPS with 100% load.

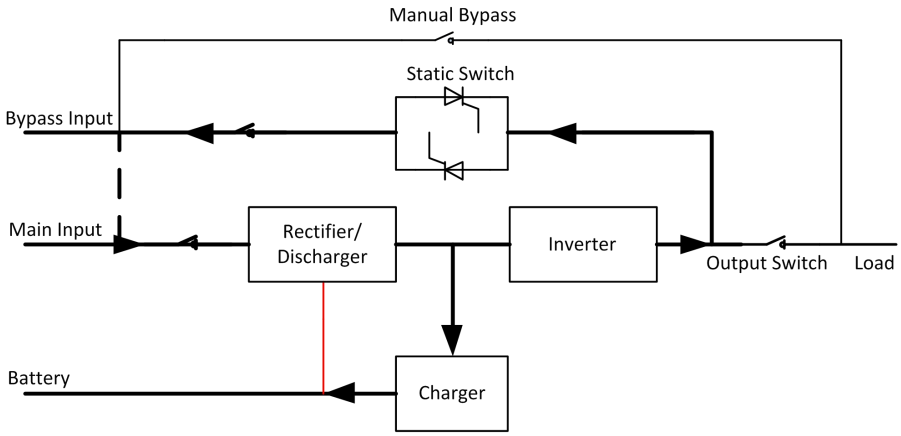

Fig.3-7 self aging operation diagram

3.2 System Block Diagram

The system block diagram of EA990G5 10-30kVA is shown as Fig.3-8.

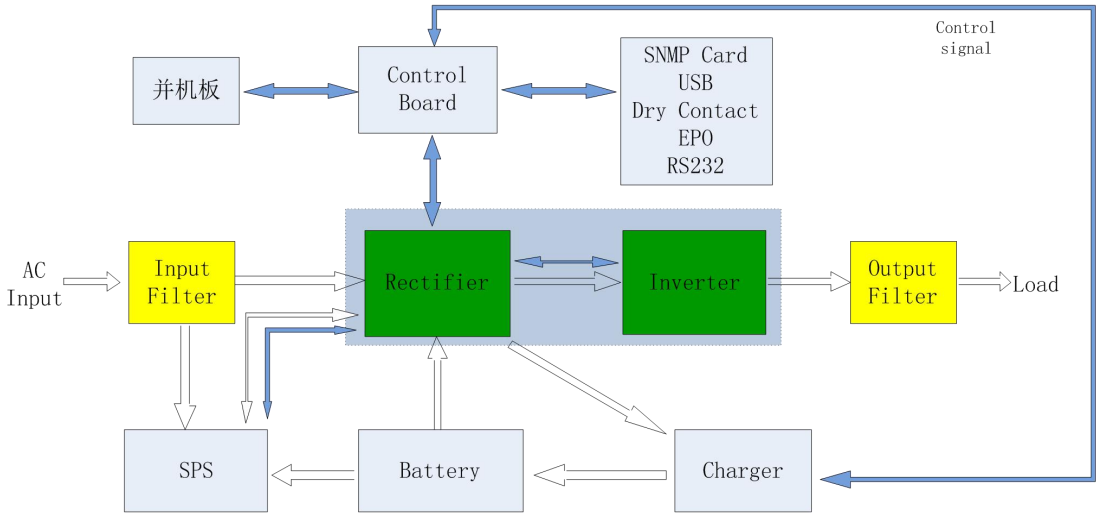

Fig.3-8 System Block Diagram

3.3 Introduction to Internal Boards

Table 3-1 Internal Boards introduction of EA990G5 10-30kVA

No.	Board name	PCBA Code	Introduction	Remark
1	10kVA IP/OP board	12-202700-00	Including input filter circuit, mains soft-start circuit, output filter circuit, auxiliary power supply and charger	
2	10kVA Power board	12-202600-00	Contains PFC boost circuit, inverter circuit and Fan circuit	
3	10k Byapss board	12-208600-00	Bypass output circiut	
4	15kVA IP/OP board	12-207800-00	Including input filter circuit, mains soft-start circuit, output filter circuit, auxiliary power supply and charger	
5	15kVA Power board	12-202601-00	Contains PFC boost circuit, inverter circuit and Fan circuit	
6	20kVA IP/OP board	12-192000-00	Including input filter circuit, mains soft-start circuit, output filter circuit, auxiliary power supply and charger	
7	20kVA Power board	12-192100-00	Contains PFC boost circuit, inverter circuit and Fan circuit	
8	20k Byapss board	12-192200-00	Bypass output circiut	15K and 20K share board
9	30kVA IP/OP board	12-201100-00	Including input filter circuit, mains soft-start circuit, output filter circuit, auxiliary power supply and charger	
10	30kVA Inductor Board	12-201300-00	Inverter inductor and inverter current sample	
11	30kVA Power board	12-201200-00	Contains PFC boost circuit, inverter circuit and Fan circuit	
12	30kVA Bypass board	12-192201-00	Bypass output circiut	
13	Dry Contact board	12-205000-00	External interface, realize the function of input and output dry contact;	Universal board
14	Parallel board	12-205100-00	External interface to realize parallel communication;	Universal board
15	Communication interface board	12-202200-01	External interface, realize RS232/RS485/USB/EPO function;	Universal board
16	LCD Driver board	12-202500-00	LCD Driver	Universal board
17	Cold start board	12-192500-00	Battery cold start	Universal board
18	Filter board 1	12-192300-00	Filter	Universal board
19	Filter board 4	12-212100-00	Filter	Universal board
20	Monitoring board	12-192501-00	Various types of external communication interface signal conversion;	Universal board

4 Troubleshooting

This chapter mainly introduces all the alarm information of the system, the meaning of the alarm, the possible cause of the alarm, and the processing method.

4.1 Repair tool List

Table 4-1 Repair tool list

Tools	Number	Remark
Oscilloscope	1	Measurement waveforms
Multimeter	1	Measure voltage and resistance, etc.
Isolated probe	Some	Measuring voltage signals
DC Source	1	Provides a current-limited DC power supply
AC Source	1	Provides current-limited AC power
Screwdrivers, Needle-nose Pliers, Diagonal Pliers, etc.	1 Set	Disassembly and assembly of machines and PCB board
Soldering iron, solder wire, etc.	1 Set	Repair welding use
AC Load	1	Use after machine maintenance and debugging

4.2 Troubleshooting process

The troubleshooting process is shown as Fig.4-1.

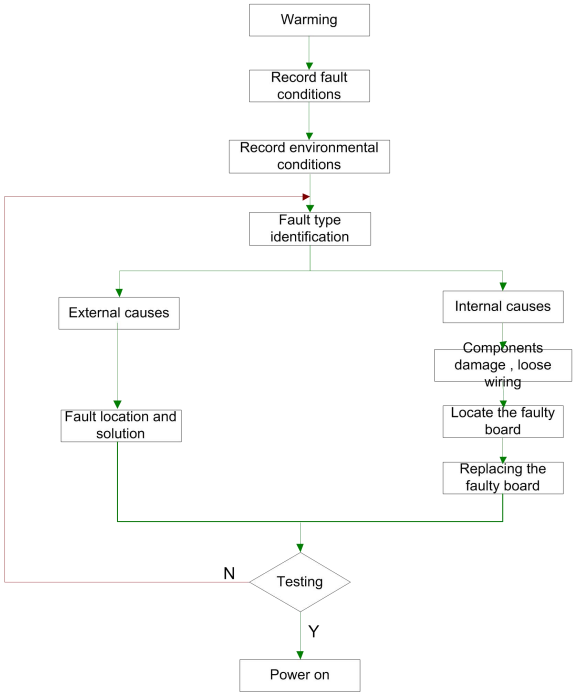

Fig.4-1 Troubleshooting process

1. Fault record of UPS: The first on-site information of the fault is very important. According to these information, the fault point and the cause of the fault can be roughly judged, and the correct solution can be formulated. Therefore, the first thing for engineers to arrive at the site is to record all the conditions of the power system, mainly recording the following:

1) The status of the UPS system (panel and monitoring information): the information of each display interface of the LCD screen when a fault occurs, and the display status of the UPS on the monitoring side;

2) History download: use IServiceTool II software to download and save the running history of the UPS;Or take pictures page by page of the LCD screen history page.

3) Actual input, output and battery parameters of the UPS system: When a fault occurs, the parameters displayed on the panel may not the real parameters of the power supply. You can use a multimeter to measure the actual parameters on the terminals and record them, including: input voltage, output voltage, battery voltage;

4) The position of each switch of the power system;

5) Environmental records: The surrounding environment is also very important to the work of the power system. After completing the above records, the surrounding working environment should be recorded:

1> How is the ventilation; 2> Ambient temperature; 3> Whether the surrounding installation distance meets the requirements; 4> Is the surrounding environment bad (such as dust or humidity); 5> How is the input and output battery wiring? Does the wire diameter meet the requirements? Is the electrical insulation damaged? Are the terminals loose? 6> The name, type, rated power, etc. of the load (you can consult the customer).

2. Fault type identification: After recording all indications, refer to the following fault information description table to check the abnormal indicator lights. In most cases, the fault is caused by external reasons of the UPS, so follow the principle of "outside first and then inside", locate and eliminate external faults according to the fault information table.

Common external failure reasons:

1> Overload

2>Input, output over, under voltage

3>The mains air switch is disconnected or the mains is abnormal

4> Output short circuit

5>The battery voltage is lower than the low voltage point.

3. If the fault may be reported due to the internal reasons of the power supply, an implementation plan shall be made according to the fault location. Each key step in the implementation of the plan should be recorded so that the unresolved problems can be referenced when the plan is re-developed.

4. If the above methods still cannot solve the fault of UPS system, the recorded information will be fed back to the technical support engineer for coordination and resolution.

4.3 Alarm information collection

4.3.1 LCD screen alarm information collection

When the maintenance personnel arrive at the scene for the first time, the alarm information needs to be collected as soon as possible in order to obtain an effective basis for fault analysis. Record the display conditions of the LCD panel (mainly fault codes) in detail, and record the working conditions of the LED indicators. According to the fault code of the machine and the indication of the LED light, we can preliminarily determine the fault category, which is convenient for locating the fault point.

4.3.2 Monitoring and alarm information collection

If the customer's power system is connected with monitoring software, maintenance personnel can download and export the current alarm information and all data through the monitoring software for analysis. For details, please refer to the user manual of the corresponding network management software.

4.4 Common faults and troubleshooting methods

The troubleshooting methods for common faulty machines are shown in table 4-2.

Table 4-2 The troubleshooting methods for common faulty

No.	Fault Description	Analysis of possible causes	Approach
1	UPS triggers overload alarm	Overload	Remove non-critical loads
2	UPS makes abnormal noise or smells	UPS internal fault	Please turn off the UPS immediately, cut off the input power, and contact the postsale engineer for technical support.
3	Power on by battery, and it automatically shut down soon after	The battery voltage is too low or the battery is damaged	Please charge the battery in time or replace it with a new one
4	The battery discharge time is significantly lower than the standard value	The battery is not fully charged or the battery is damaged	Please charge the battery in time or replace it with a new one

4.5 Alarm detailed explanation and handling suggestions

Alarm detailed explanation and handling suggestions are shown in table 4-3.

Table 4-3 Alarm detailed explanation and handling suggestions table

ID	Faults and alarms	Description	suggestion
230	Battery voltage low (DOD)	Default 1.1 times EOD voltage (can be set)	Check if the charger is abnormal
231	Battery end of discharge (EOD)	The default cell voltage is 1.65~1.75V, which can be set	No processing required
232	Bypass fail	Bypass SCR is open or shorted	1. Check whether the bypass board SCR is damaged; 2. Check whether the signal cable from the bypass board to the input and output board is normal;
233	Fan fail	Fan fault signal trigger	Replace the Fan;

243	Grid input breaker open	The effective value of the three-phase input voltage is lower than 35%	1. Check whether the mains input air switch is disconnected; 2. Check whether the mains input insurance is damaged;
245	UPS maintenance breaker close	Maintenance bypass closed signal trigger	Check whether the maintenance bypass cover is loose;
246	UPS bypass breaker open	The effective value of the three-phase bypass voltage is lower than 35%	Check whether the bypass air circuit breaker is disconnected;
337	Same address of multiple inverter	Parallel addresses are the same	Please check whether the addresses of each UPS in the parallel system are duplicated
366	Frequency beyond tracing range	The bypass frequency exceeds the set tracking range	Check whether the bypass voltage is abnormal
368	Bypass phase overvoltage	Bypass voltage out of set range	Check whether the bypass voltage is abnormal
369	Bypass phase undervoltage	Bypass voltage is lower than set range	Check whether the bypass voltage is abnormal
370	Bypass overfrequence	Bypass frequency out of set range	Check whether the bypass voltage is abnormal
371	Bypass underfrequence	Bypass frequency out of set range	Check whether the bypass voltage is abnormal
372	Bypass phase sequence error	Bypass reversed	Check whether the bypass phase sequence is reversed
373	Bypass phase loss	Bypass missing 1 or 2 phases	Check whether the bypass voltage is abnormal
374	Bypass phase volt imbalance	Bypass voltage is not 120 degree symmetrical	Check whether the bypass voltage is abnormal
375	Bypass voltage rapid inspection abnormal	Bypass instantaneous voltage is higher than 1.25 times or lower than 0.8 times rated voltage	Check whether the bypass voltage is abnormal
418	Battery maintenance reminder	Battery maintenance reminder time is up	Maintaining Batteries: Perform Battery Test 2
423	Battery self check fail	There is an abnormal PFC alarm during the battery test	Please replace the power board
464	Input overvoltage	Input voltage higher than 280V	Check whether the mains input voltage is abnormal
465	Input undervoltage	Input voltage below 132V	Check whether the mains input voltage is abnormal
466	Input overfrequence	Input frequency higher than 70Hz	Check whether the mains input voltage is abnormal
467	Input underfrequence	Input frequency below 40Hz	Check whether the mains input voltage is abnormal

468	Input phase sequence error	input reversed	Check whether the phase sequence of the mains input voltage is reversed
469	Input phase loss	Input missing 1 or 2 phases	Check whether the mains input voltage is abnormal
470	Input voltage imbalance	The difference between the maximum and the lowest input voltage is 17V	Check whether the mains input voltage is abnormal
471	input voltage rapid inspection abnormal	The instantaneous value of the input voltage is higher than 1.35 times rated or lower than 0.45 times rated	Check whether the mains input voltage is abnormal
472	Input overcurrent	Input current is higher than 1.35 times rated current	Check if the input voltage is too low
473	Input current imbalance	The difference between the maximum and minimum input current is 0.25 times the rated current	Please replace the power board
474	Input null wire loss	Abnormal three-phase input voltage DC	Please check whether the input neutral line is connected normally;
477	Frequent switching between grid and battery	Mains and battery switching over 5 times within 1 hour	Check whether the mains input voltage is abnormal
480	Battery disconnect	battery is not connected	Please check if the battery is connected;
482	Battery self check fail	There is an abnormal PFC alarm during the battery test	Please replace the power board
483	Battrey overvoltage	The battery voltage is 10V higher than the equalizing voltage	Please check whether the battery voltage is abnormal;
484	Battery undervoltage DOD	When the battery voltage is lower than 1.1 times the EOD voltage, it can be set	Please check whether the battery voltage is abnormal;
489	Battery charging overcurrent	The battery current is 1.1 times greater than the limit current	Please replace the I/O board
491	Open circuit of battery fuse/ charger switch	Charger switch open	Please replace the I/O board
492	Charger switch short circuit	Charger switch short circuit	Please replace the I/O board
494	Reverse battery connection	battery reversed	Please check whether the battery is connected properly;
521	PFC sofe start fail	The busbar soft-start stage does not reach the set voltage	Please replace the power board
528	Rectifier IGBT module overtemperature	Rectification temperature is higher than 80 degrees	Please check whether the fan is abnormal;
529	Rectifier E2PROM read-write failure	Rectifier E2PROM read and write failed	Please replace the I/O board
546	Charger sofe start fail	The charger voltage soft start does not reach the battery voltage	Please replace the I/O board

547	Charger overvoltage	The charger voltage is 10V higher than the equalizing voltage	Please replace the I/O board
549	Charger undervoltage	Charger voltage is lower than 80% of battery voltage	Please replace the I/O board
592	Bus-bar short circuit	The bus voltage continuously drops more than 150V in 3ms	Please replace the power board
594	Bus-bar overvoltage	Bus voltage higher than 450V	Please replace the power board
595	Bus-bar undervoltage	Bus voltage below 286V	Please replace the power board
596	Bus-bar voltage imbalance	The difference between the positive and negative bus voltage is 40V	Please replace the power board
608	Inverter overvoltage	Inverter voltage is 1.05 times higher than rated	Please replace the power board
609	Inverter undervoltage	Inverter voltage is 0.95 times lower than rated	Please replace the power board
612	Inverter module 105% overload	Inverter overload 105 and more than 1 hour	Please remove non-critical loads
613	Inverter module 110% overload	Inverter overload 110% and more than 1 hour	Please remove non-critical loads
614	Inverter module 125% overload	Inverter overload 125% and more than 10 minutes	Please remove non-critical loads
615	Inverter module 150% overload	Inverter overload 150% and more than 1 minute	Please remove non-critical loads
616	Short circuit of inverter output	Inverter short circuit exceeds 200ms	Remove the load and check for a short circuit
617	Inverter module overload alarm	Inverter overload 100%	Please remove non-critical loads
626	BYP 125% overload	Bypass overload 125% for more than 10 minutes	Please remove non-critical loads
627	BYP 135% overload	Bypass overload 135% for more than 1 minute	Please remove non-critical loads
628	BYP 150% overload	Bypass overload 150% for more than 1 second	Please remove non-critical loads
629	BYP 200% overload	Bypass overload 200% for more than 20ms	Please remove non-critical loads
630	Bypass overload alarm	Bypass overload 100%	Please remove non-critical loads
640	nverter sofe start fail	The inverter soft start voltage does not reach 0.9 times the rated voltage	Please replace the power board
642	Frequent switching between bypass and inverter	Bypass and inverter switching over 5 times within 1 hour	Manually clear faults
644	Parallel operation current imbalance	The difference between the maximum and minimum load rates between parallel UPS systems is more than 30%	Please check whether the parallel communication is abnormal

648	Parallel operation wire abnormal	Parallel operation wire abnormal	1. Check whether the parallel cable connection is normal; 2. Replace the parallel line;
656	Inverter radiator overtemperature	Inverter temperature is higher than 80 degrees	Please check whether the fan is abnormal;
657	Inverter E2PROM operation failure	Inverter E2PROM read and write failed	Please replace the I/O board
658	Inverter DSP and monitor communication failure	The communication of the clock chip is abnormal	Please replace the I/O board
663	Emergency shutdown	Emergency shutdown	Please check whether the EPO terminal is loose;
672	Inverter relay open circuit	Inverter relay open circuit	Please replace the I/O board
673	Inverter relay short circuit	Inverter relay short circuit	Please replace the I/O board
676	SPI communication failure between rectifier and inverter	SPI communication failure between rectifier and inverter	Please replace the I/O board

5 Board replacement

5.1 Board replacement of 10kVA model

The 10kVA model includes the following boards: power board, IP/OP board, bypass board, monitoring board, cold start board, parallel interface board, communication interface board, dry contact board; the specific locations are shown in Fig.5-1 to 5-5.

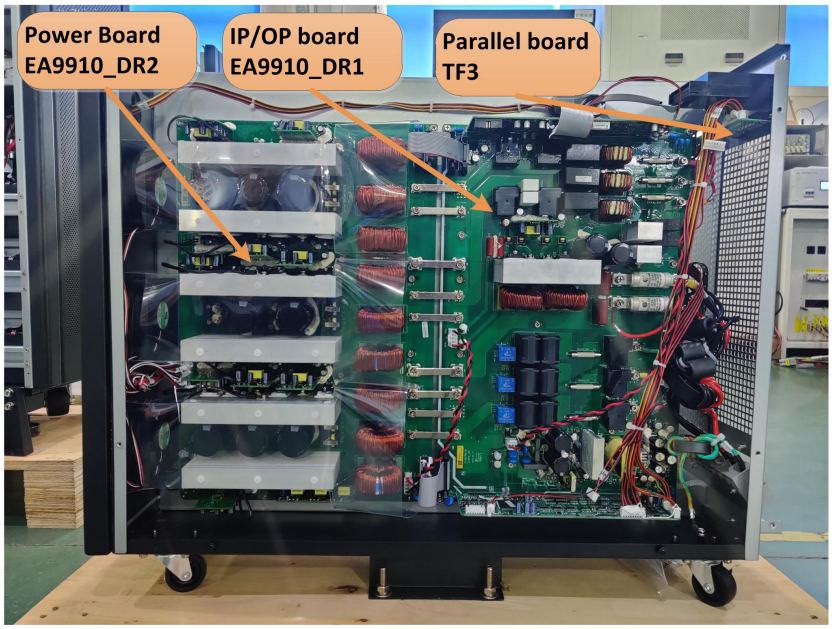

Fig.5-1 The right side board of 10kVA long-delay model (Tower)

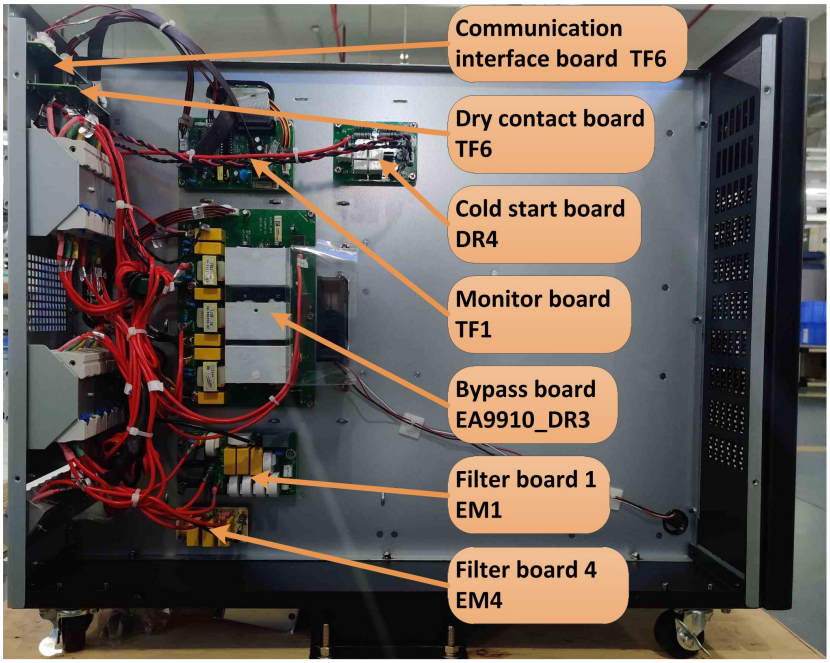

Fig.5-2 The left side board of 10kVA long-delay model (Tower)

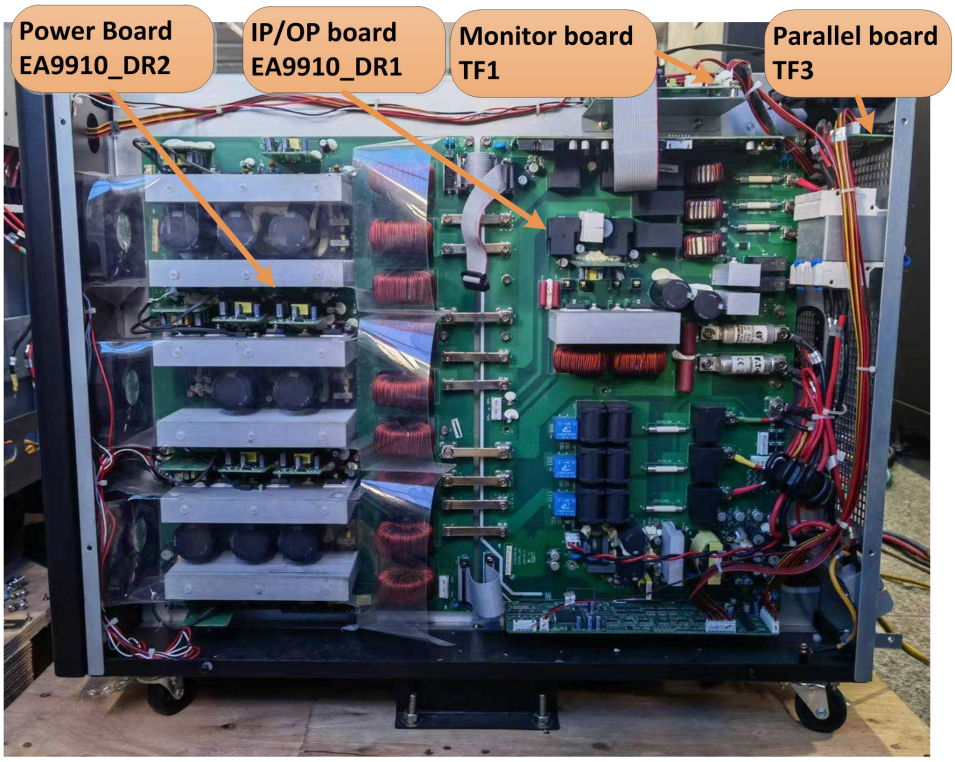

Fig.5-3 The right side board of 10kVA standard model (Tower)

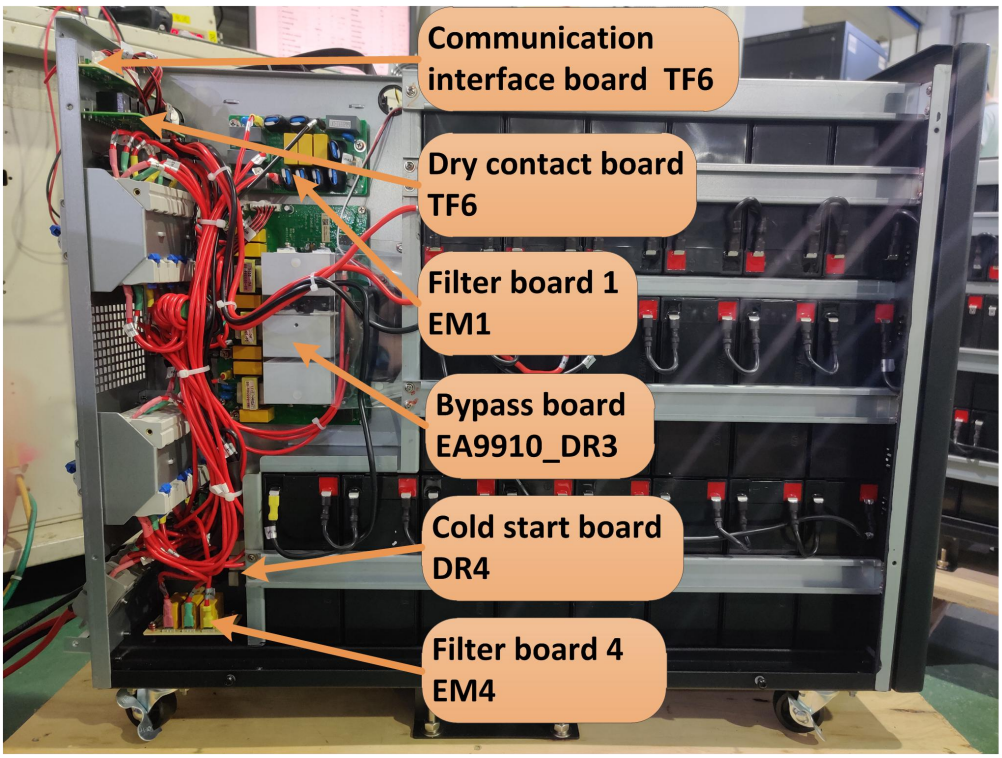

Fig.5-4 The left side board of 10kVA standard model (Tower)

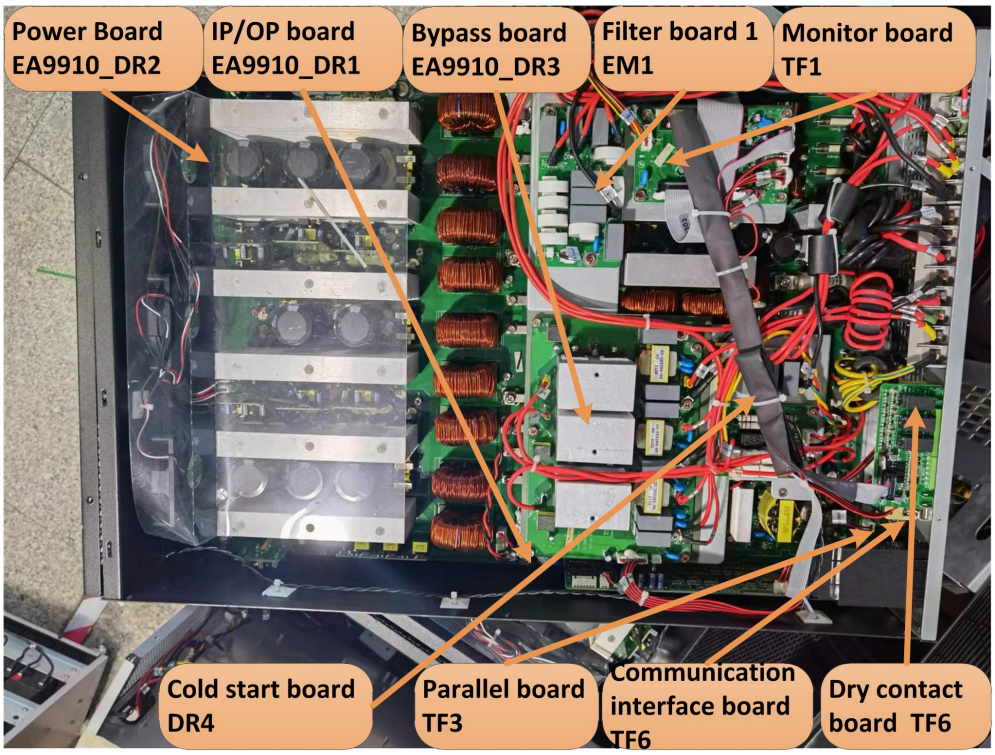

Fig.5-5 The board of 10kVA model (Rack)

5.2 Board replacement of 15kVA model

The 15kVA model includes the following boards: power board, IP/OP board, bypass board, monitoring board, cold start board, parallel interface board, communication interface board, dry contact board; the specific locations are shown in Fig.5-6 to 5-10.

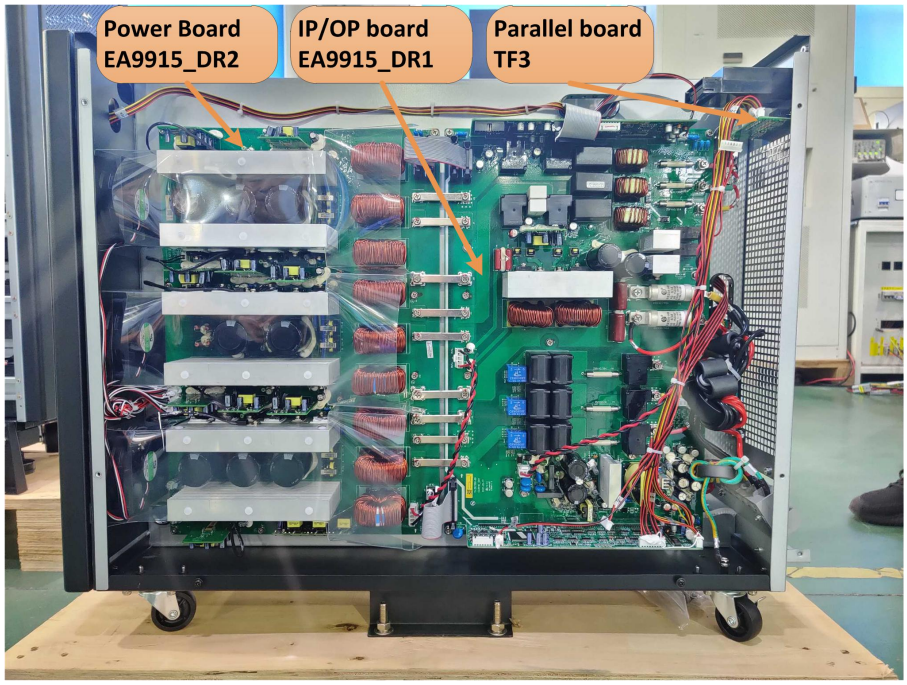

Fig.5-6 The right side board of 15kVA long-delay model (Tower)

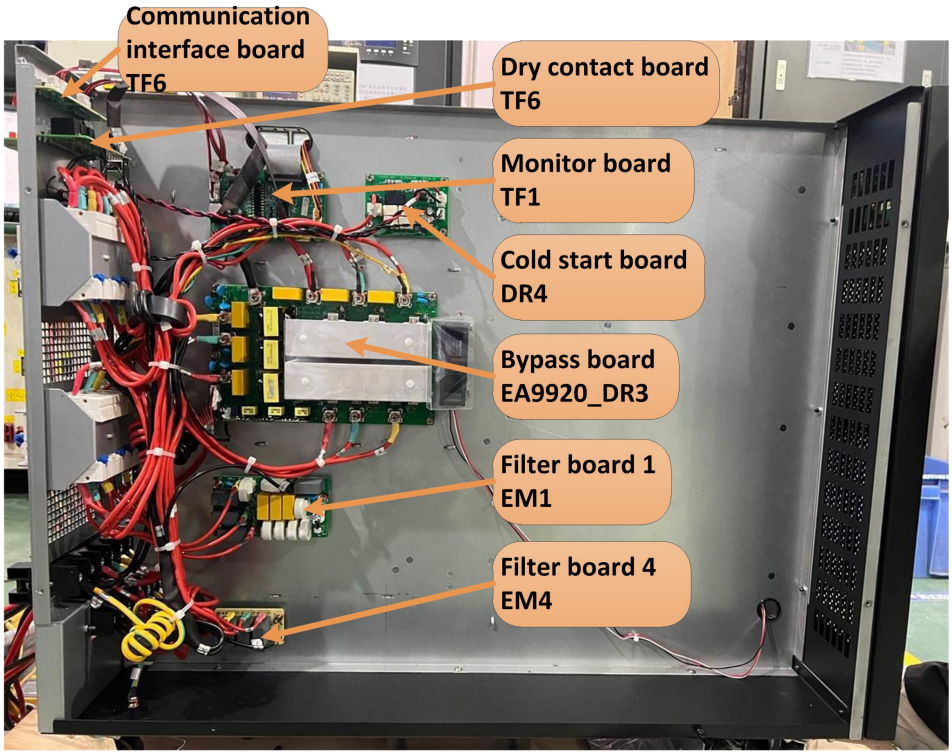

Fig.5-7 The left side board of 15kVA long-delay model (Tower)

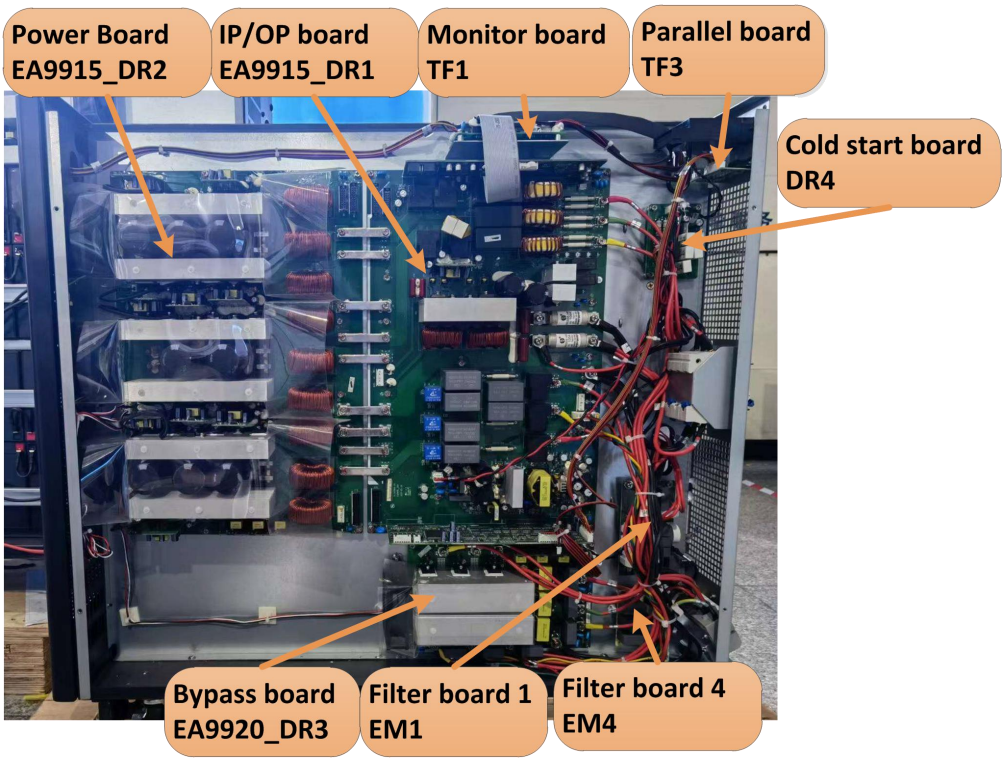

Fig.5-8 The right side board of 15kVA standard model (Tower)

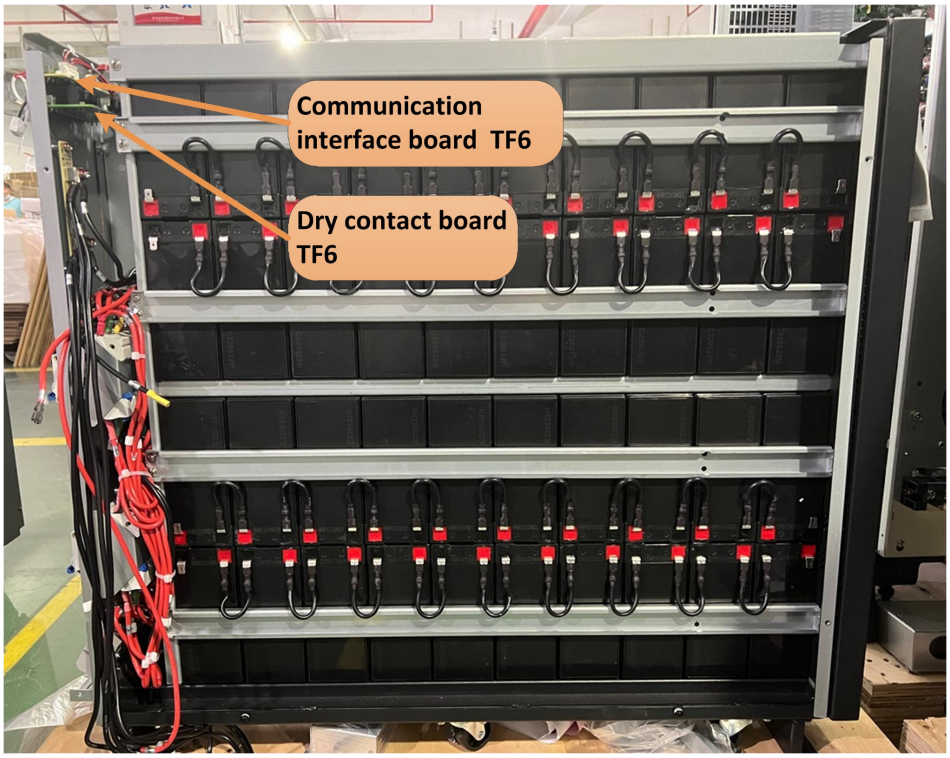

Fig.5-9 The left side board of 15kVA standard model (Tower)

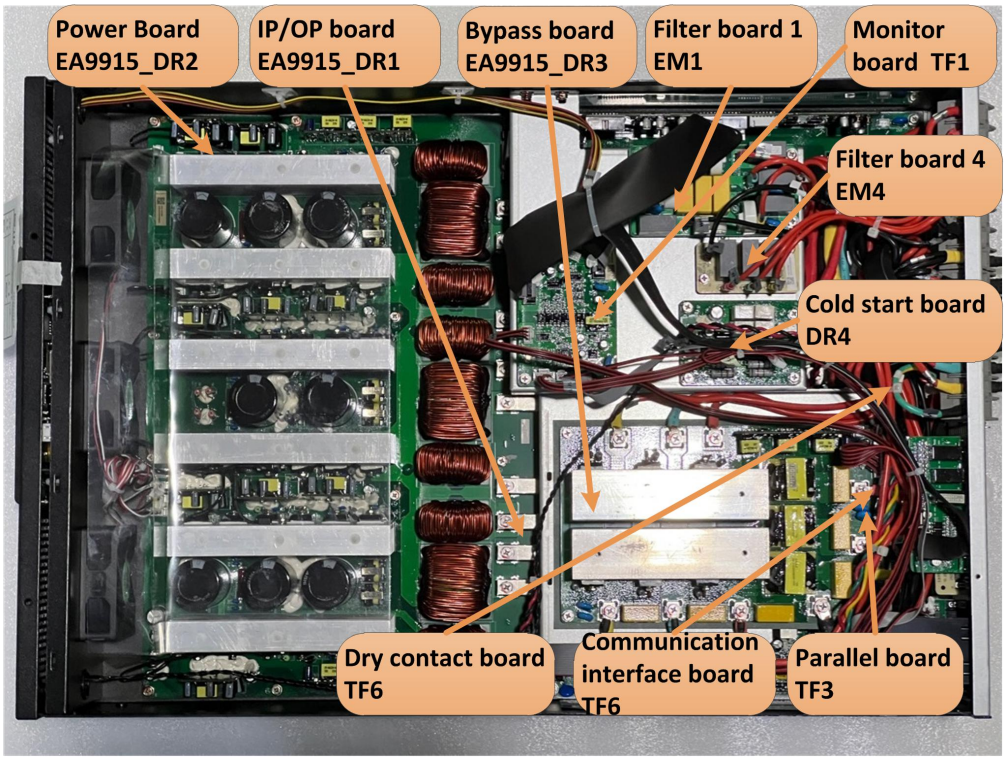

Fig.5-10 The board of 15kVA model (Rack)

5.3 Board replacement of 20kVA model

The 20kVA model includes the following boards: power board, IP/OP board, bypass board, monitoring board, cold start board, parallel interface board, communication interface board, dry contact board; the specific locations are shown in Fig.5-11 to 5-15.

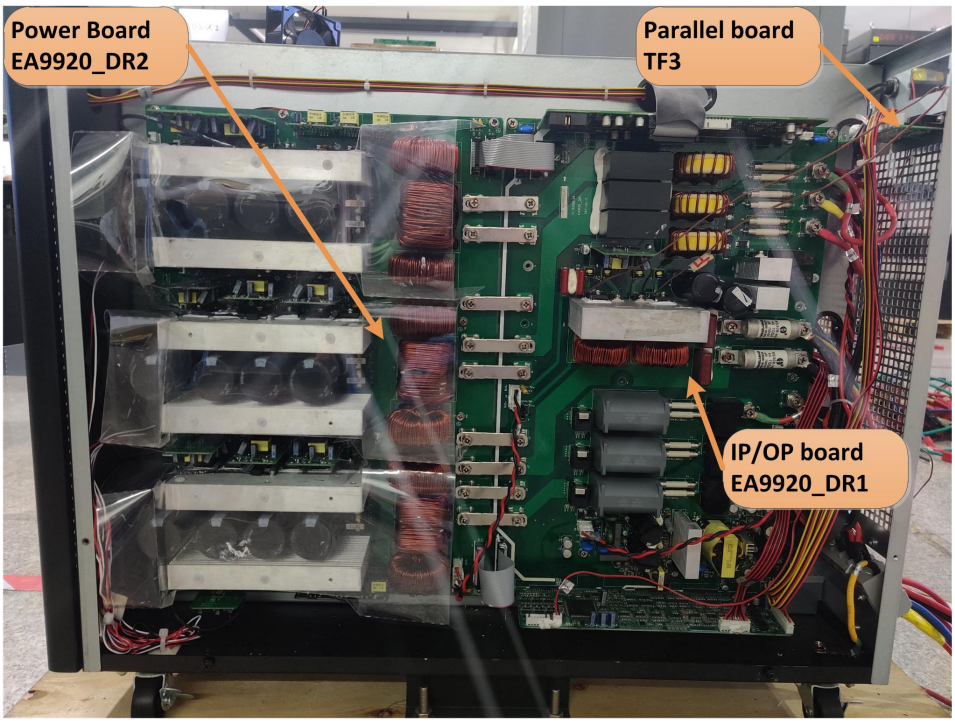

Fig.5-11 The right side board of 20kVA long-delay model (Tower)

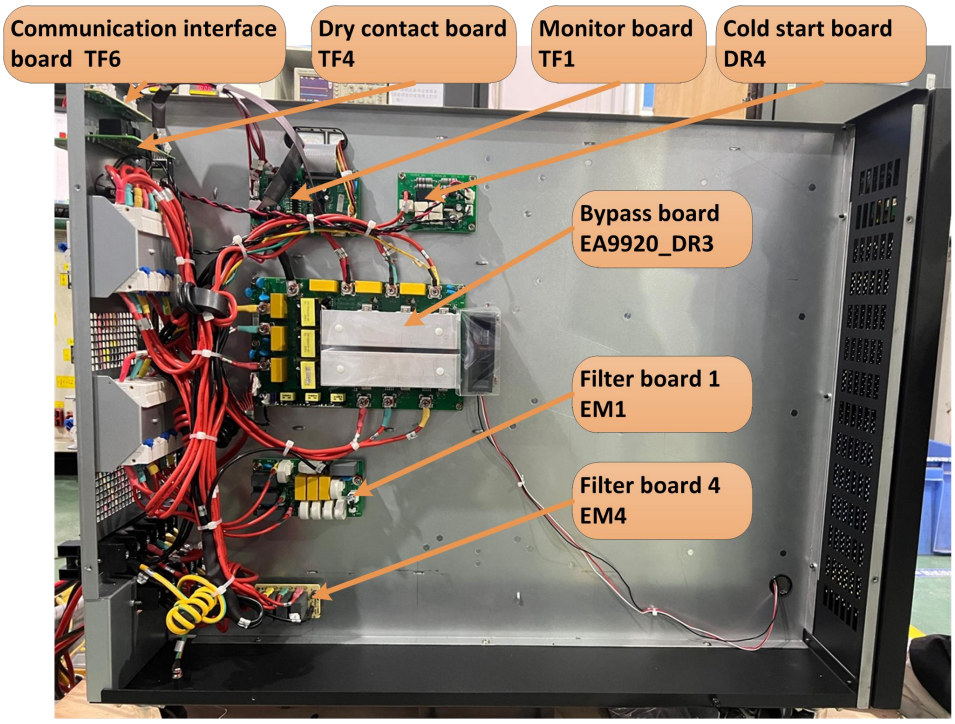

Fig.5-12 The left side board of 20kVA long-delay model (Tower)

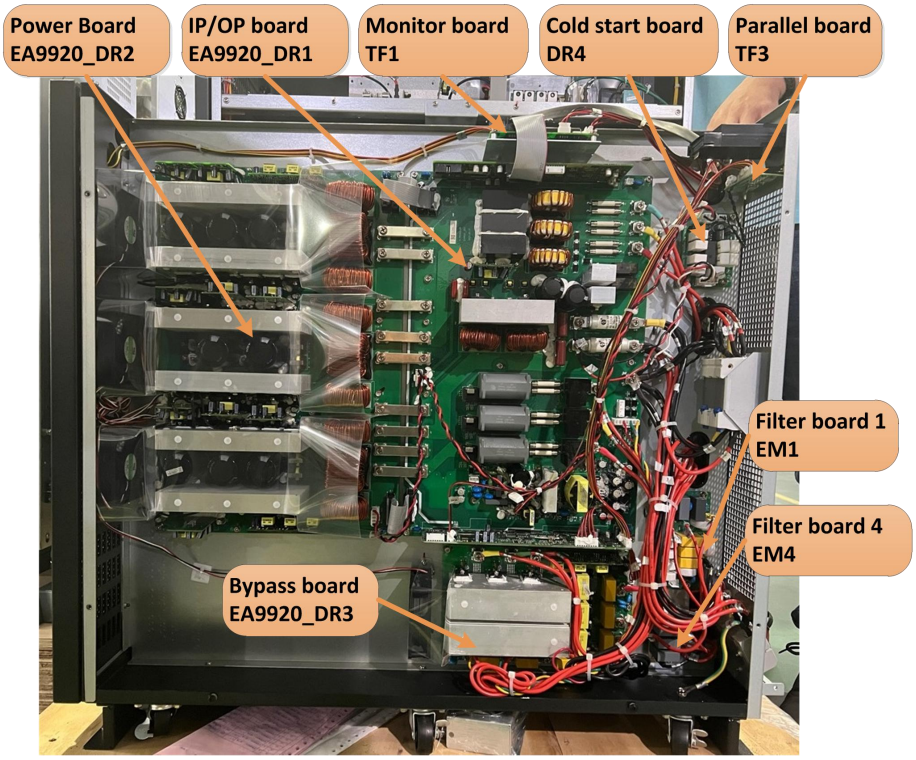

Fig.5-13 The right side board of 20kVA standard model (Tower)

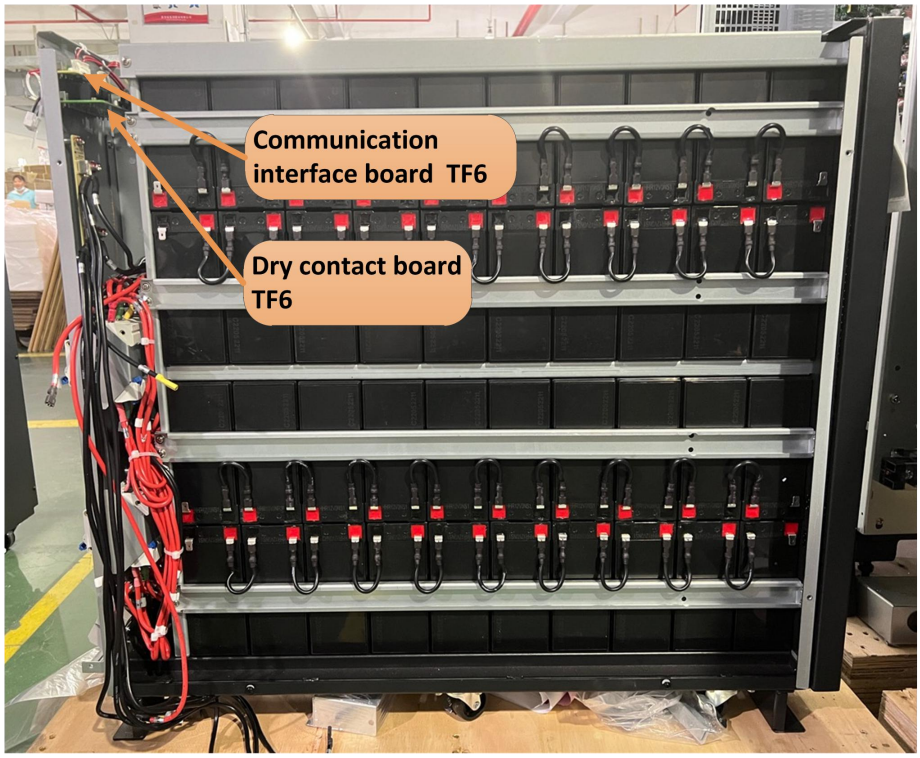

Fig.5-14 The lest side board of 20kVA standard model (Tower)

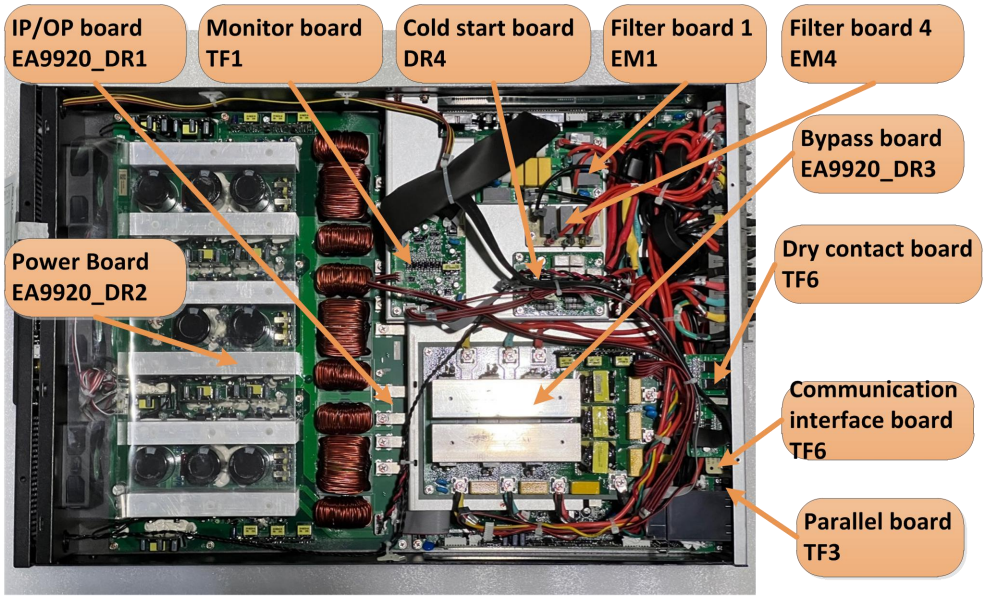

Fig.5-15 The board of 20kVA model (Rack)

5.4 Board replacement of 30kVA model

The 30kVA model includes the following boards: power board, IP/OP board, Inductor board, bypass board, monitoring board, cold start board, parallel interface board, communication interface board, dry contact board; the specific locations are shown in Fig.5-16 to 5-20.

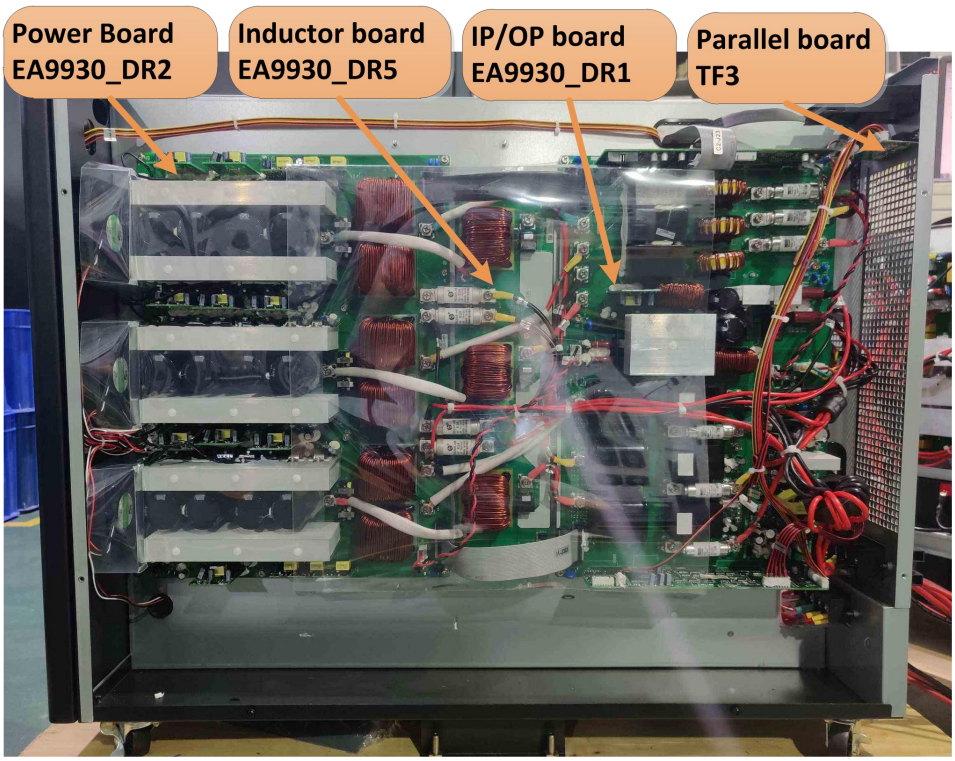

Fig.5-16 The right side board of 30kVA long-delay model (Tower)

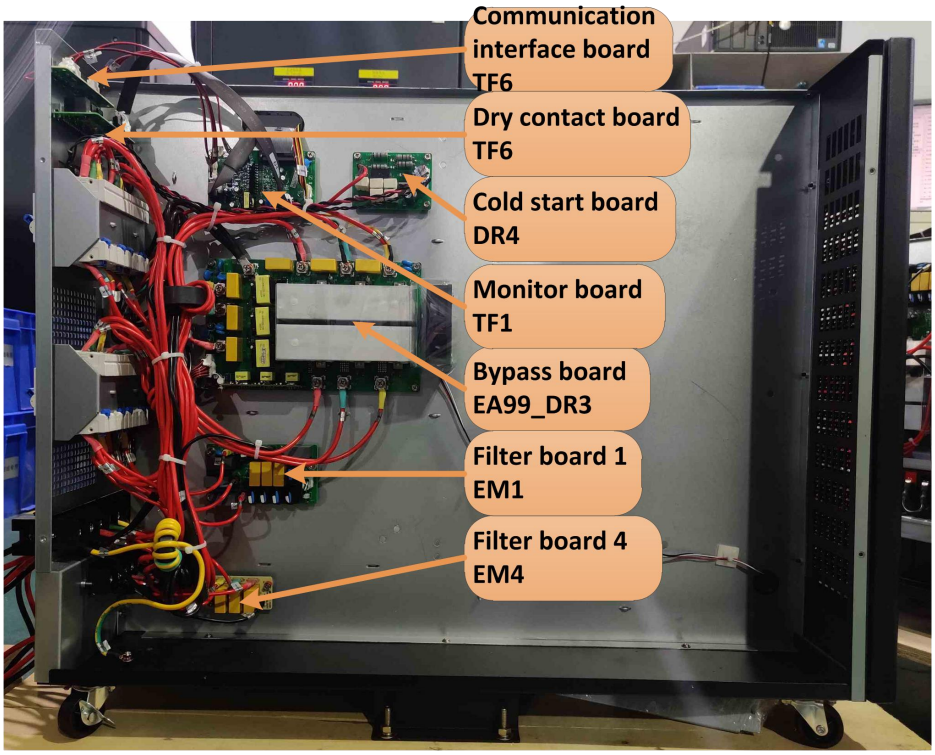

Fig.5-17 The left side board of 30kVA long-delay model (Tower)

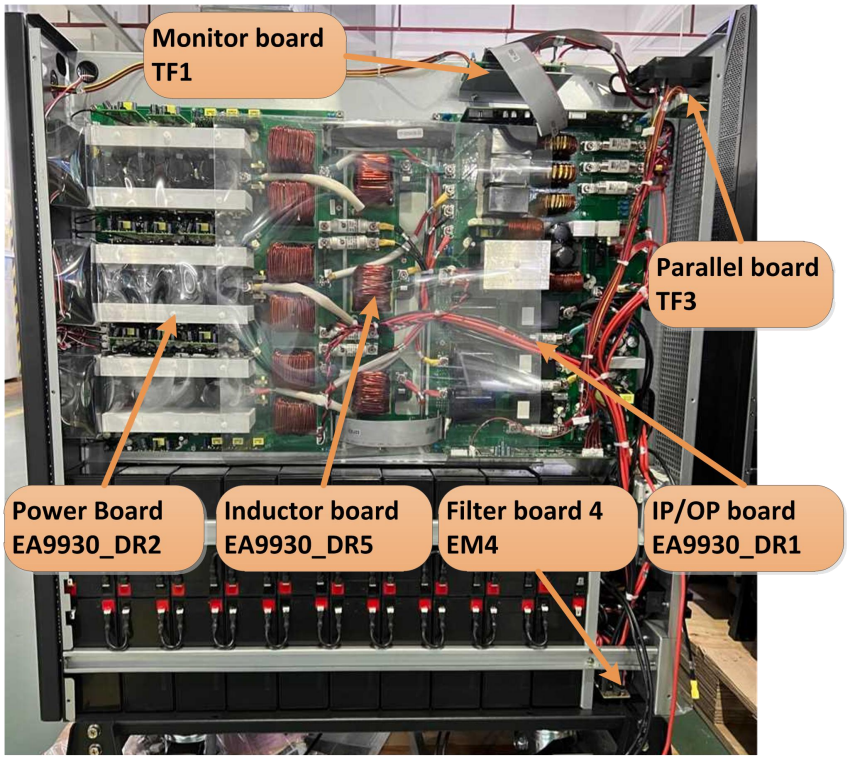

Fig.5-18 The right side board of 30kVA standard model (Tower)

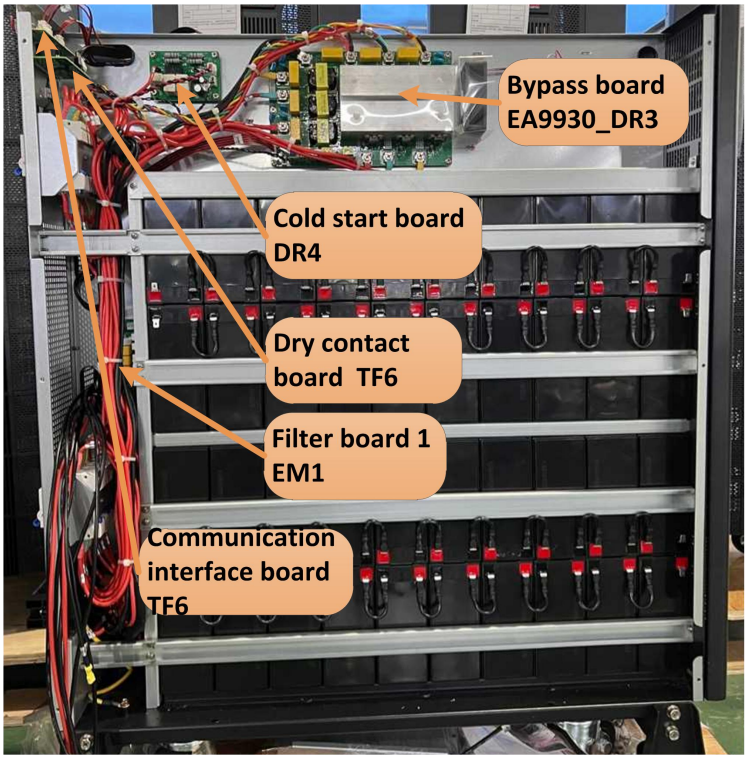

Fig.5-19 The left side board of 30kVA standard model (Tower)

6 Board maintenance

Maintenance of EA990 G5 10-30kVA series UPS requires maintenance engineer having basic circuit theory, power electronics related knowledge, and knowledge of related circuit topology. In addition, the improvement of maintenance skills requires the accumulation of long-term maintenance experience. Please keep a good record of maintenance notes during the maintenance process. The maintenance notes are convenient for future maintenance, which can help maintenance engineer quickly locate problem points, quickly solve problems, and improve his maintenance efficiency.

According to the actual use, the EA990 G5 10-30kVA vulnerable parts are the main power board, input and output board, bypass board, monitoring board and cold start board. The following will explain the maintenance of these boards of the whole series of UPS.

6.1 Maintenance of power board

6.1.1 Maintenance of 10kVA power board

The 10kVA power board is mainly divided into a rectifier booster part and an inverter part. Among them, the fragile components are shown in Table 6-1, and the position of the board is shown in Fig. 6-1.

Table 6-1 The fragile componments of 10kVA power board

Components	Tag Number	Specifications	Alternative specification
Diode of input retifier	D11,D12,D13,D14,D15,D16	RHRP30120	MM30FU120K
Battery SCR	S7,S8,S9,S10,S11,S12	VS-50TPS12L-M3	CLA50E1200HB
Battery SCR driver module	PCB11		
Boost IGBT	Q1,Q2,Q3,Q4,Q5,Q6	IKW50N65H5	MM75G5U65BX
Inverter outer bridge IGBT	Q7,Q8,Q11,Q12,Q15,Q16	IKW25N120T2	MM40G3U120BX
Inverter inner bridge IGBT	Q9,Q10,Q13,Q14,Q17,Q18	IKW30N65EL5	JT050N065WED
IGBT driver module	PCB1,PCB2,PCB3,PCB4,PCB5, PCB6,PCB7,PCB8,PCB9		
Zenner diode of IGBT driver	ZD6,ZD7,ZD8,ZD9,ZD10,ZD11, ZD12,ZD13,ZD14,ZD15,ZD16, ZD17,ZD18,ZD19,ZD20,ZD21, ZD22,ZD23,ZD24,ZD25,ZD26, ZD27,ZD28,ZD29,ZD30,ZD31, ZD32,ZD33,ZD34,ZD35,ZD36, ZD37,ZD38,ZD39,ZD40,ZD41	ZMM18	
Boost diode	D1,D2,D3,D4,D5,D6	RHRP3060	MM30FU60K

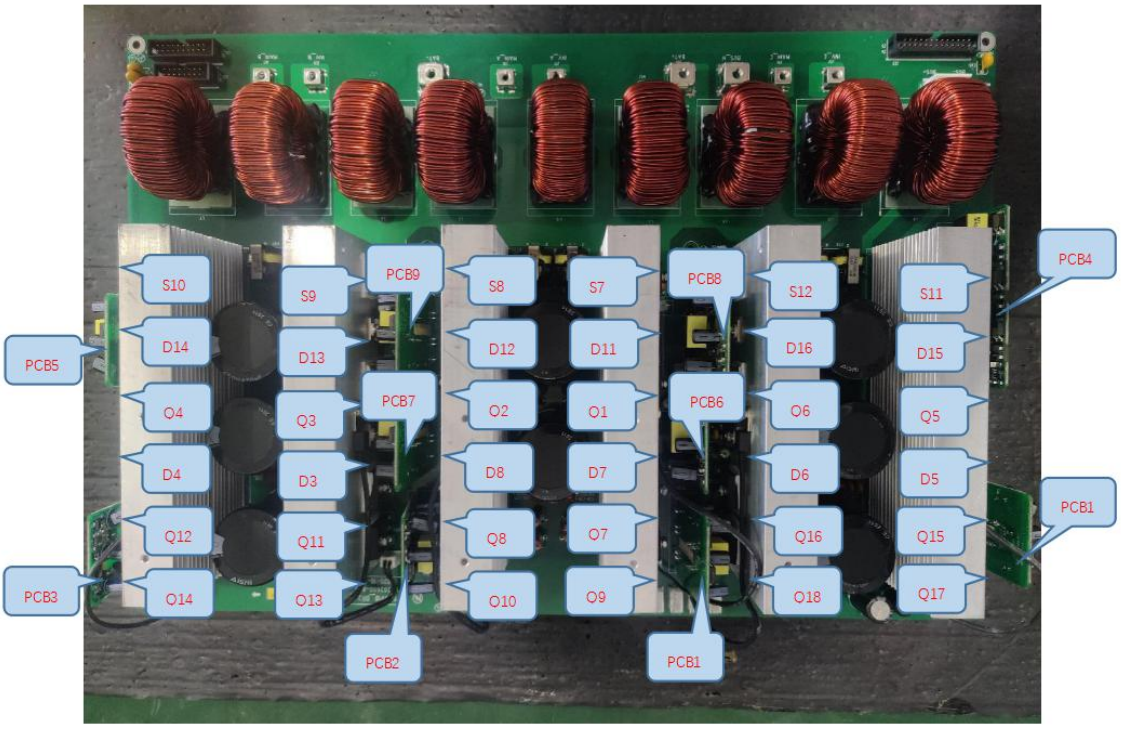

Fig.6-1 Key components identification of 10kVA power board

The detailed maintenance steps are as follows:

Step 1: Check whether the copper foil is corroded and rusted on the whole power board. You can use a multimeter to assist in the inspection. If there is corrosion, the copper foil needs to be re-soldered.

Step 2: Visually inspect the entire power board for obvious burns or cracks, and replace if necessary.

Step 3: Use the diode gear of the multimeter to detect the PIN1(+)-PIN3(-) and PIN2(+)-PIN3(-) of the boost IGBT and the inverter outer/inner bridge IGBT. If the multimeter shows that the voltage drop is too low (less than 0.1V), you need to replace the corresponding IGBT.

Note: When replacing the IGBT, it is necessary to apply heat dissipation paste on the back of the IGBT. If the corresponding insulating gasket is blackened, burned, burned through, burned, etc., it should also be replaced together.

Step 4: Use the multimeter diode gear to detect the Zenner diode of IGBT driver. If the multimeter shows that the voltage drop is too low (less than 0.1V), the corresponding Zener diode needs to be replaced.

Note: If the IGBT is found to be damaged in step 3, the corresponding driving Zener diode will also be damaged.

Step 5: Use the diode gear of the multimeter to test the input rectifier diode and Boost diode. If the forward voltage drop is too low (less than 0.1V) or there is also a reverse voltage drop, the diode may be damaged and needs to be replaced.

Step 6: Measure the resistance of the battery thyristor (SCR) with a multimeter in the ohm range. The normal resistance should be around 20Ω. If not, it needs to be replaced.

After completing the inspection work in steps 1-6, replace the damaged device; after replacing the device, use the shorting cap to short-circuit J2 of the rectifier control board CT1 and J2 of the inverter control board CT2, and then follow the steps shown in Figure 6-2. Connection method Connect the main power board to the input and output board (only connect the signal cable, not the copper bus), and carry out the drive test. The test waveforms of each key device are shown in Table 6-2.

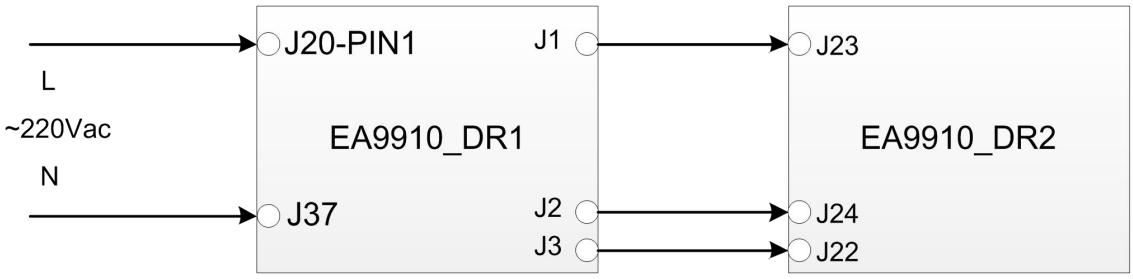

Fig.6-2 The connection of drive test circuit of 10kVA power board

Table 6-2 The driver test description of 10kVA power board

Component and its tag number	Waveform	Remark
Boost IGBT Q1,Q2,Q3,Q4,Q5,Q6	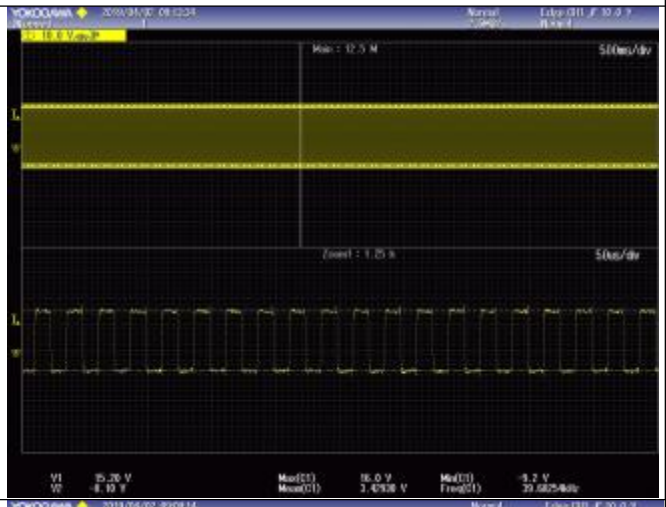	High level +15V±1V； Low level -8V±1V； Frequency 40KHz；
Inverter outer bridge IGBT Q7,Q8,Q11,Q12,Q15,Q16		High level +15V±1V； Low level -8V±1V； Frequency 20KHz；

Inverter inner bridge IGBT Q9,Q10,Q13,Q14,Q17,Q18	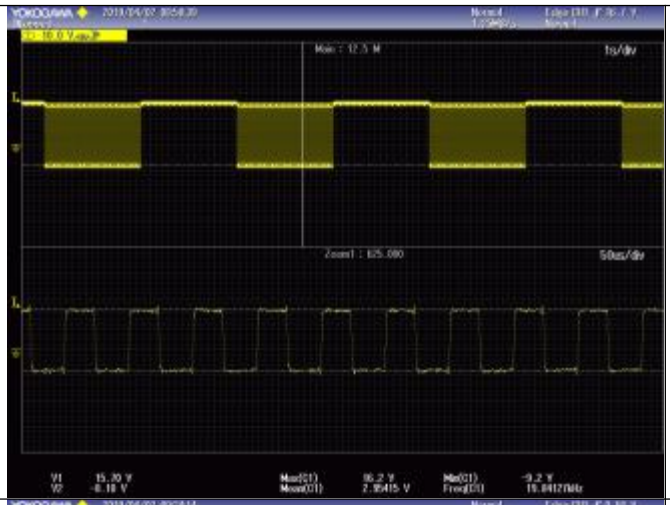	High level +15V±1V； Low level -8V±1V； Frequency 20KHz；
Battery SCR S7,S8,S9,S10,S11,S12		High level 1V-1.5V； Low level 0V；

If it is found that the individual IGBT or SCR drive is abnormal during the drive test, please re-check whether the device is replaced, and check whether the corresponding drive module is damaged.

6.1.2 Maintenance of 15kVA power board

The 15kVA power board is mainly divided into a rectifier booster part and an inverter part. Among them, the fragile components are shown in Table 6-3, and the position of the board is shown in Fig. 6-3.

Table 6-3 The fragile componments of 15kVA power board

Components	Tag Number	Specifications	Alternative specification
Diode of input retifier	D11,D12,D13,D14,D15,D16	RHRP30120	MM30FU120K
Battery SCR	S7,S8,S9,S10,S11,S12	VS-50TPS12L-M3	CLA50E1200HB
Battery SCR driver module	PCB11		
Boost IGBT	Q1,Q2,Q3,Q4,Q5,Q6	IKW50N65H5	MM75G5U65BX
Inverter outer bridge IGBT	Q7,Q8,Q11,Q12,Q15,Q16	IKW25N120T2	MM40G3U120BX
Inverter inner bridge IGBT	Q9,Q10,Q13,Q14,Q17,Q18	IKW30N65EL5	JT050N065WED
IGBT driver module	PCB1,PCB2,PCB3,PCB4,PCB5, PCB6,PCB7,PCB8,PCB9		
Zenner diode of IGBT driver	ZD6,ZD7,ZD8,ZD9,ZD10,ZD11, ZD12,ZD13,ZD14,ZD15,ZD16,	ZMM18	

	ZD17,ZD18,ZD19,ZD20,ZD21, ZD22,ZD23,ZD24,ZD25,ZD26, ZD27,ZD28,ZD29,ZD30,ZD31, ZD32,ZD33,ZD34,ZD35,ZD36, ZD37,ZD38,ZD39,ZD40,ZD41		
Boost diode	D1,D2,D3,D4,D5,D6	RHRP3060	MM30FU60K

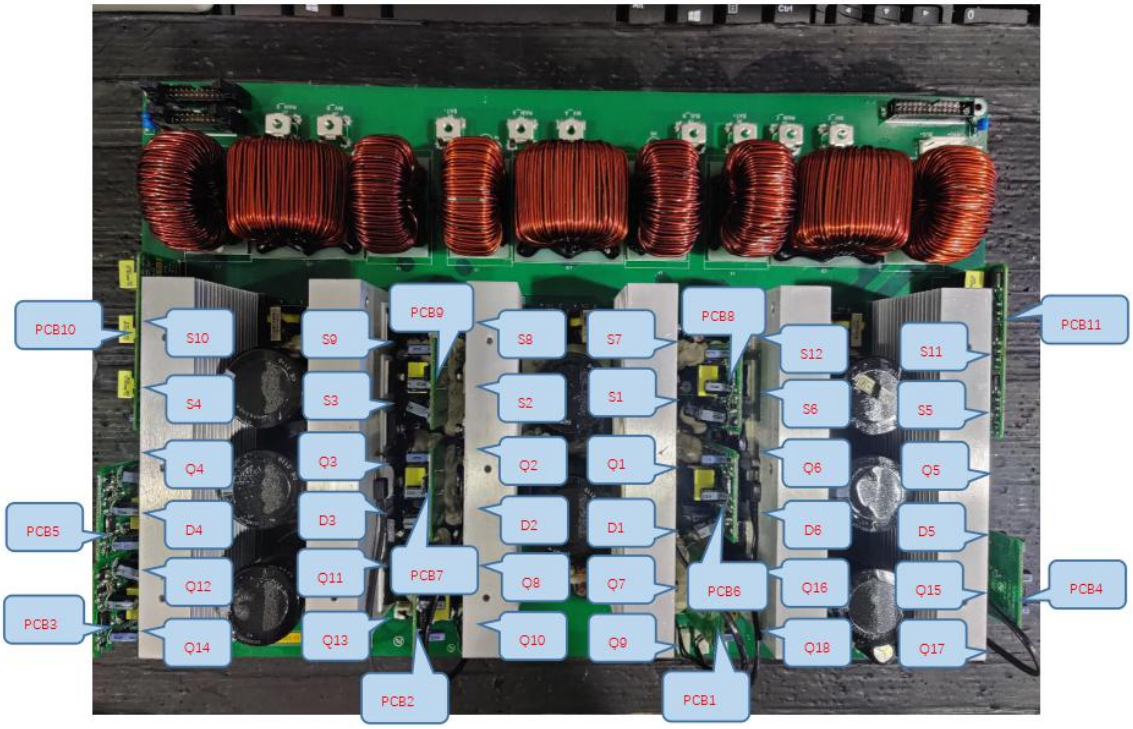

Fig.6-3 Key components identification of 15kVA power board

The detailed maintenance steps are as follows:

Step 1: Check whether the copper foil is corroded and rusted on the whole power board. You can use a multimeter to assist in the inspection. If there is corrosion, the copper foil needs to be re-soldered.

Step 2: Visually inspect the entire power board for obvious burns or cracks, and replace if necessary.

Step 3: Use the diode gear of the multimeter to detect the PIN1(+)-PIN3(-) and PIN2(+)-PIN3(-) of the boost IGBT and the inverter outer/inner bridge IGBT. If the multimeter shows that the voltage drop is too low (less than 0.1V), you need to replace the corresponding IGBT.

Note: When replacing the IGBT, it is necessary to apply heat dissipation paste on the back of the IGBT. If the corresponding insulating gasket is blackened, burned, burned through, burned, etc., it should also be replaced together.

Step 4: Use the multimeter diode gear to detect the Zenner diode of IGBT driver. If the multimeter shows that the voltage drop is too low (less than 0.1V), the corresponding Zener diode needs to be replaced.

Note: If the IGBT is found to be damaged in step 3, the corresponding driving Zener diode will also be damaged.

Step 5: Use the diode gear of the multimeter to test the input rectifier diode and Boost diode. If the forward voltage drop is too low (less than 0.1V) or there is also a reverse voltage drop, the diode may be damaged and needs to be replaced.

Step 6: Measure the resistance of the battery thyristor (SCR) with a multimeter in the ohm range. The normal resistance should be around 20Ω. If not, it needs to be replaced.

After completing the inspection work in steps 1-6, replace the damaged device; after replacing the device, use the shorting cap to short-circuit J2 of the rectifier control board CT1 and J2 of the inverter control board CT2, and then follow the steps shown in Figure 6-4. Connection method Connect the main power board to the input and output board (only connect the signal cable, not the copper bus), and carry out the drive test. The test waveforms of each key device are shown in Table 6-4.

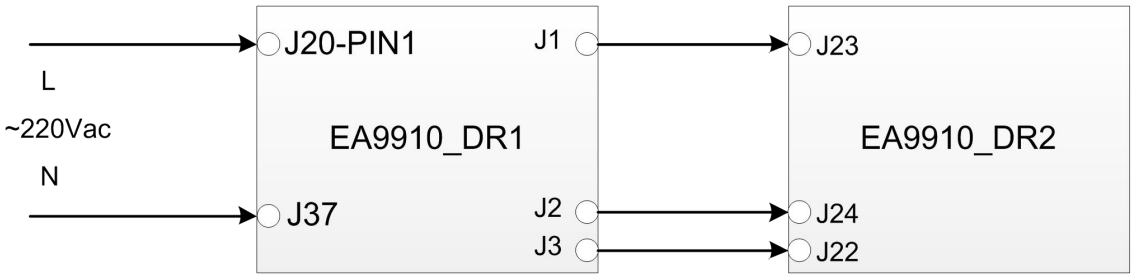

Fig.6-4 The connection of drive test circuit of 15kVA power board

Table 6-4 The driver test description of 15kVA power board

Component and its tag number	Waveform	Remark
Boost IGBT Q1,Q2,Q3,Q4,Q5,Q6	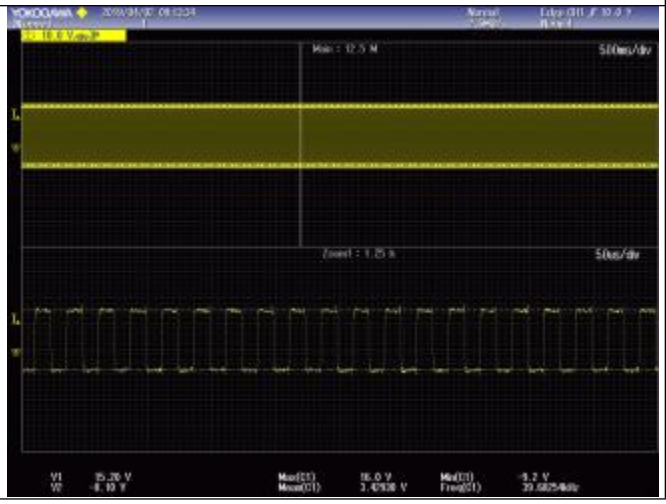	High level +15V±1V； Low level -8V±1V； Frequency 40KHz；

Inverter outer bridge IGBT Q7,Q8,Q11,Q12,Q15,Q16	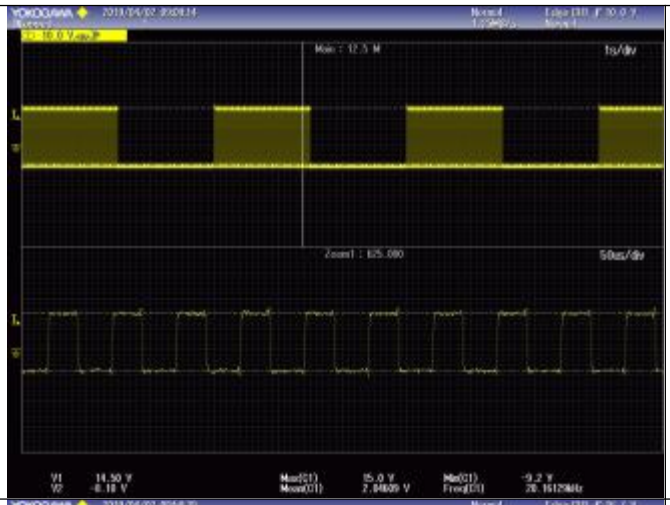	High level +15V±1V； Low level -8V±1V； Frequency 20KHz；
Inverter inner bridge IGBT Q9,Q10,Q13,Q14,Q17,Q18	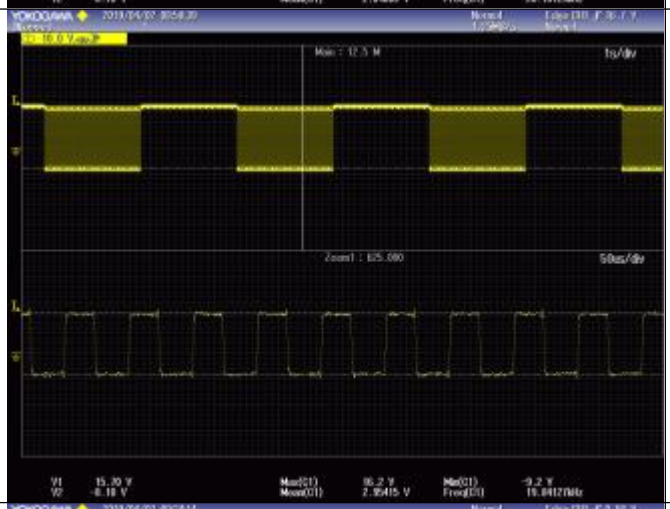	High level +15V±1V； Low level -8V±1V； Frequency 20KHz；
Battery SCR S7,S8,S9,S10,S11,S12		High level 1V-1.5V； Low level 0V；

If it is found that the individual IGBT or SCR drive is abnormal during the drive test, please re-check whether the device is replaced, and check whether the corresponding drive module is damaged.

6.1.3 Maintenance of 20kVA power board

The 20kVA power board is mainly divided into a rectifier booster part and an inverter part. Among them, the fragile components are shown in Table 6-5, and the position of the board is shown in Fig. 6-5.

Table 6-5 The fragile componments of 20kVA power board

Components	Tag Number	Specifications	Alternative specification
Battery SCR	S1,S2,S3,S4,S5,S6,S7,S8,S9,S10,S11, S12	VS-50TPS12L-M3	CLA50E1200HB
Battery SCR driver module	PCB10,PCB11		
Boost IGBT	Q1,Q2,Q3,Q4,Q5,Q6	IKW50N65H5	MM75G5U65BX
Inverter outer bridge IGBT	Q7,Q8,Q11,Q12,Q15,Q16	IKW40N120CS6	MM40G3U120BX
Inverter inner bridge IGBT	Q9,Q10,Q13,Q14,Q17,Q18	IKW30N65EL5	JT050N065WED
IGBT driver module	PCB1,PCB2,PCB3,PCB4,PCB5,PCB 6,PCB7,PCB8,PCB9		
Zenner diode of IGBT driver	ZD6,ZD7,ZD8,ZD9,ZD10,ZD11, ZD12,ZD13,ZD14,ZD15,ZD16, ZD17,ZD18,ZD19,ZD20,ZD21, ZD22,ZD23,ZD24,ZD25,ZD26, ZD27,ZD28,ZD29,ZD30,ZD31, ZD32,ZD33,ZD34,ZD35,ZD36, ZD37,ZD38,ZD39,ZD40,ZD41	ZMM18	
Boost diode	D1,D2,D3,D4,D5,D6	APT75DQ60BG	MM75FU60B

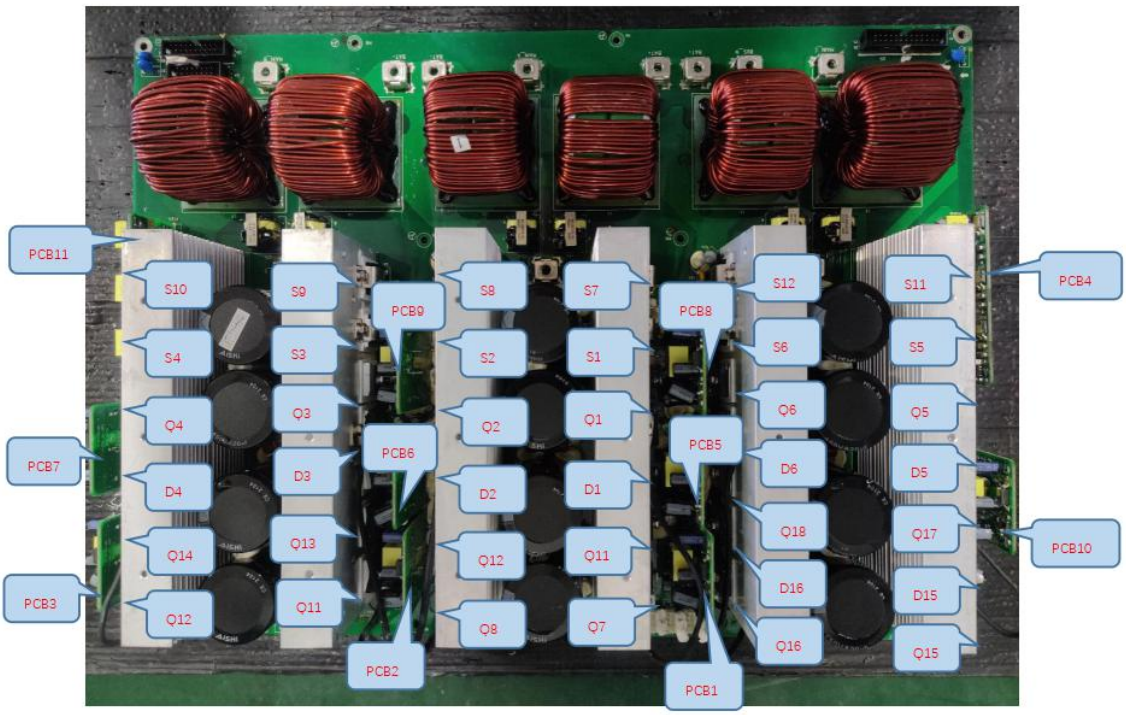

Fig.6-5 Key components identification of 20kVA power board

The detailed maintenance steps are as follows:

Step 1: Check whether the copper foil is corroded and rusted on the whole power board. You can use a multimeter to assist in the inspection. If there is corrosion, the copper foil needs to be re-soldered.

Step 2: Visually inspect the entire power board for obvious burns or cracks, and replace if necessary.

Step 3: Use the diode gear of the multimeter to detect the PIN1(+)-PIN3(-) and PIN2(+)-PIN3(-) of the boost IGBT and the inverter outer/inner bridge IGBT. If the multimeter shows that the voltage drop is too low (less than 0.1V), you need to replace the corresponding IGBT.

Note: When replacing the IGBT, it is necessary to apply heat dissipation paste on the back of the IGBT. If the corresponding insulating gasket is blackened, burned, burned through, burned, etc., it should also be replaced together.

Step 4: Use the multimeter diode gear to detect the Zenner diode of IGBT driver. If the multimeter shows that the voltage drop is too low (less than 0.1V), the corresponding Zener diode needs to be replaced.

Note: If the IGBT is found to be damaged in step 3, the corresponding driving Zener diode will also be damaged.

Step 5: Use the diode gear of the multimeter to test the input rectifier diode and Boost diode. If the forward voltage drop is too low (less than 0.1V) or there is also a reverse voltage drop, the diode may be damaged and needs to be replaced.

Step 6: Measure the resistance of the battery thyristor (SCR) with a multimeter in the ohm range. The normal resistance should be around 20Ω. If not, it needs to be replaced.

After completing the inspection work in steps 1-6, replace the damaged device; after replacing the device, use the shorting cap to short-circuit J2 of the rectifier control board CT1 and J2 of the inverter control board CT2, and then follow the steps shown in Figure 6-6. Connection method Connect the main power board to the input and output board (only connect the signal cable, not the copper bus), and carry out the drive test. The test waveforms of each key device are shown in Table 6-6.

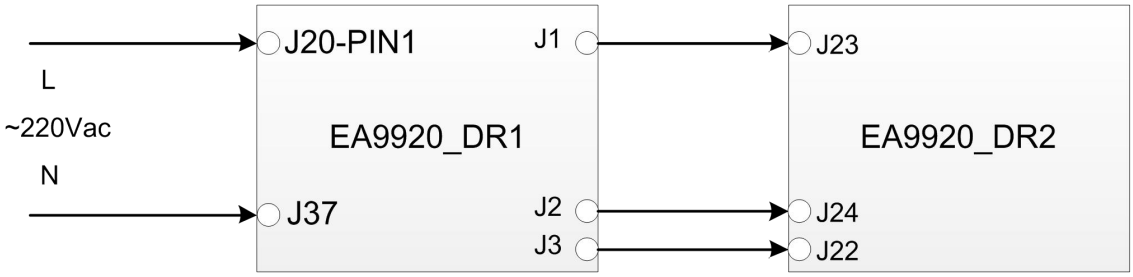

Fig.6-4 The connection of drive test circuit of 20kVA power board

Table 6-4 The driver test description of 20kVA power board

Component and its tag number	Waveform	Remark

Boost IGBT Q1,Q2,Q3,Q4,Q5,Q6	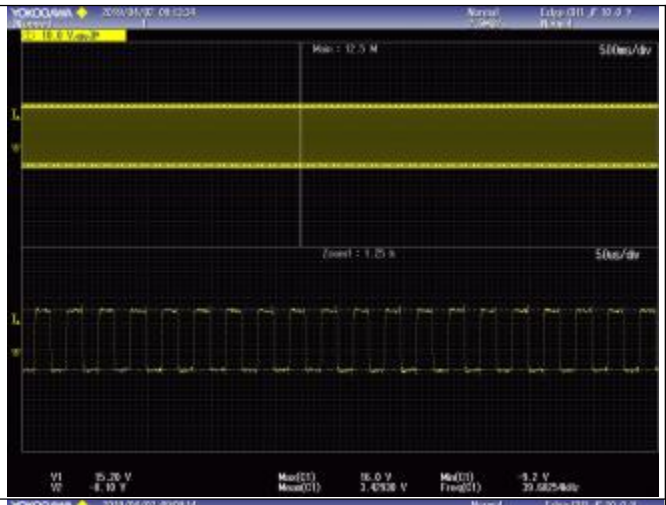	High level +15V±1V； Low level -8V±1V； Frequency 40KHz；
Inverter outer bridge IGBT Q7,Q8,Q11,Q12,Q15,Q16	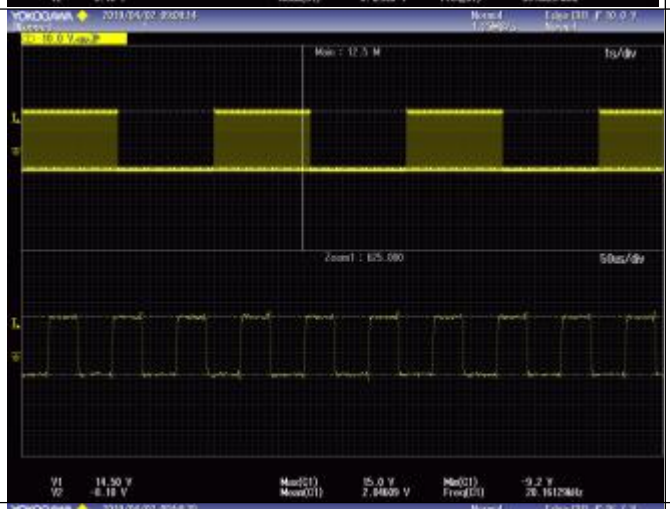	High level +15V±1V； Low level -8V±1V； Frequency 20KHz；
Inverter inner bridge IGBT Q9,Q10,Q13,Q14,Q17,Q18		High level +15V±1V； Low level -8V±1V； Frequency 20KHz；

Main and battery SCR S1,S2,S3,S4,S5,S6,S7,S8,S9,S10,S11,S12		High level 1V-1.5V； Low level 0V；

If it is found that the individual IGBT or SCR drive is abnormal during the drive test, please re-check whether the device is replaced, and check whether the corresponding drive module is damaged.

6.1.4 Board replacement of 30kVA model

The 20kVA power board is mainly divided into a rectifier booster part and an inverter part. Among them, the fragile components are shown in Table 6-7, and the position of the board is shown in Fig. 6-7.

Table 6-7 The fragile componments of 30kVA power board

Components	Tag Number	Specifications	Alternative specification
Battery SCR	S1,S2,S3,S4,S5,S6,S7,S8,S9,S10,S11,S12	VS-70TPSPBF	
Battery SCR driver module	PCB10,PCB11		
Boost IGBT	Q1,Q2,Q3,Q4,Q5,Q6	IKW75N65EH5	NCE80TD65BT
Inverter outer bridge IGBT	Q7,Q8,Q11,Q12,Q15,Q16	IKW75N65ES5	SGTP75V65SDS1P7
Inverter inner bridge IGBT	Q9,Q10,Q13,Q14,Q17,Q18	IKW75N65EL5	NCE80TD65BT
IGBT driver module	PCB1,PCB2,PCB3,PCB4,PCB5,PCB6,PCB7,PCB8,PCB9		
Zenner diode of IGBT driver	ZD6,ZD7,ZD8,ZD9,ZD10,ZD11,ZD12,ZD13,ZD14,ZD15,ZD16,ZD17,ZD18,ZD19,ZD20,ZD21,ZD22,ZD23,ZD24,ZD25,ZD26,ZD27,ZD28,ZD29,ZD30,ZD31,ZD32,ZD33,ZD34,ZD35,ZD36,ZD37,ZD38,ZD39,ZD40,ZD41	ZMM18	
Boost diode	D1,D2,D3,D4,D5,D6	FFH70H60S	MM75FU60B

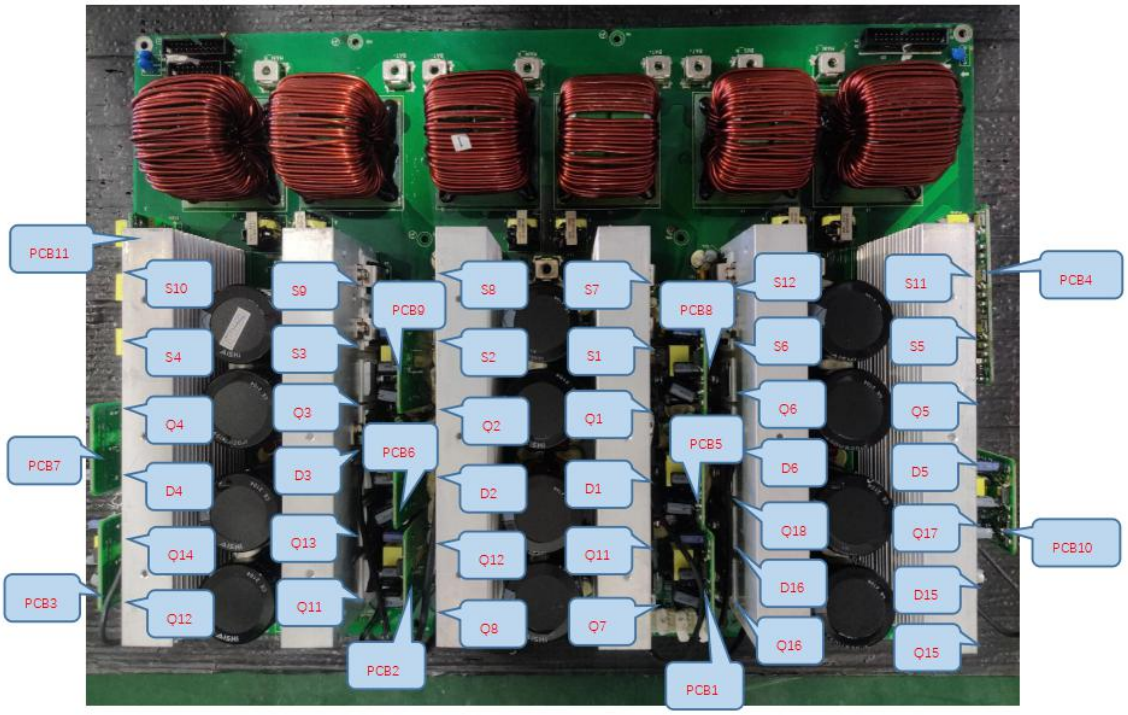

Fig.6-7 Key components identification of 30kVA power board

The detailed maintenance steps are as follows:

Step 1: Check whether the copper foil is corroded and rusted on the whole power board. You can use a multimeter to assist in the inspection. If there is corrosion, the copper foil needs to be re-soldered.

Step 2: Visually inspect the entire power board for obvious burns or cracks, and replace if necessary.

Step 3: Use the diode gear of the multimeter to detect the PIN1(+)-PIN3(-) and PIN2(+)-PIN3(-) of the boost IGBT and the inverter outer/inner bridge IGBT. If the multimeter shows that the voltage drop is too low (less than 0.1V), you need to replace the corresponding IGBT.

Note: When replacing the IGBT, it is necessary to apply heat dissipation paste on the back of the IGBT. If the corresponding insulating gasket is blackened, burned, burned through, burned, etc., it should also be replaced together.

Step 4: Use the multimeter diode gear to detect the Zenner diode of IGBT driver. If the multimeter shows that the voltage drop is too low (less than 0.1V), the corresponding Zener diode needs to be replaced.

Note: If the IGBT is found to be damaged in step 3, the corresponding driving Zener diode will also be damaged.

Step 5: Use the diode gear of the multimeter to test the input rectifier diode and Boost diode. If the forward voltage drop is too low (less than 0.1V) or there is also a reverse voltage drop, the diode may be damaged and needs to be replaced.

Step 6: Measure the resistance of the battery thyristor (SCR) with a multimeter in the ohm range. The normal resistance should be around 20Ω. If not, it needs to be replaced.

After completing the inspection work in steps 1-6, replace the damaged device; after replacing the device, use the shorting cap to short-circuit J2 of the rectifier control board CT1 and J2 of the inverter control board CT2, and then follow the steps shown in Figure 6-8. Connection method Connect the main power board to the input and output board (only connect the signal cable, not the copper bus), and carry out the drive test. The test waveforms of each key device are shown in Table 6-8.

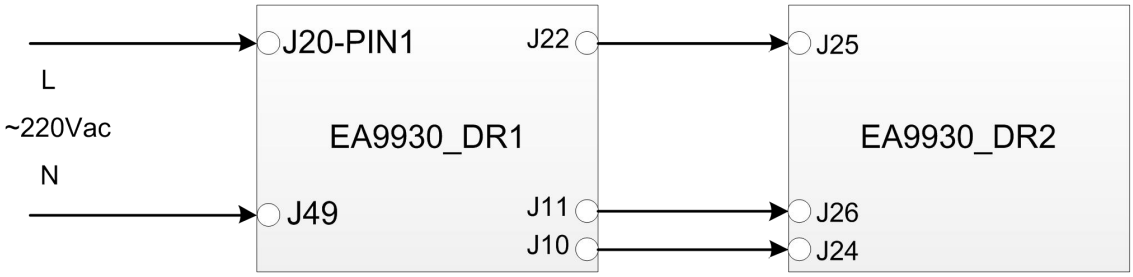

Fig.6-8 The connection of drive test circuit of 30kVA power board

Table 6-8 The driver test description of 30kVA power board

Component and its tag number	Waveform	Remark
Boost IGBT Q1,Q2,Q3,Q4,Q5,Q6	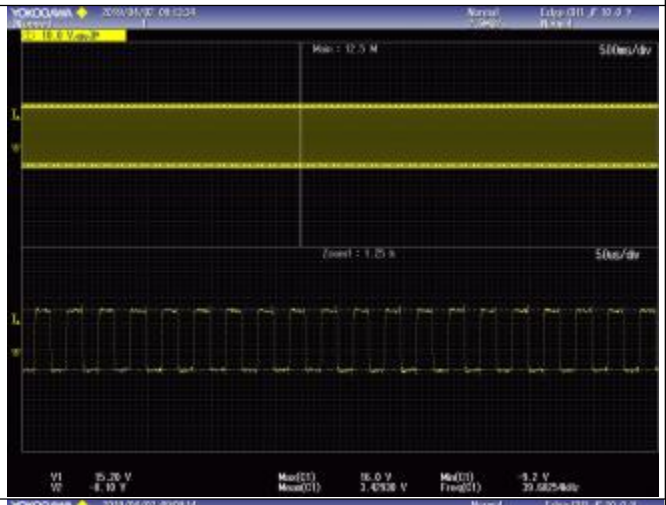	High level +15V±1V； Low level -8V±1V； Frequency 40KHz；
Inverter outer bridge IGBT Q7,Q8,Q11,Q12,Q15,Q16		High level +15V±1V； Low level -8V±1V； Frequency 20KHz；

Inverter inner bridge IGBT Q9,Q10,Q13,Q14,Q17,Q18	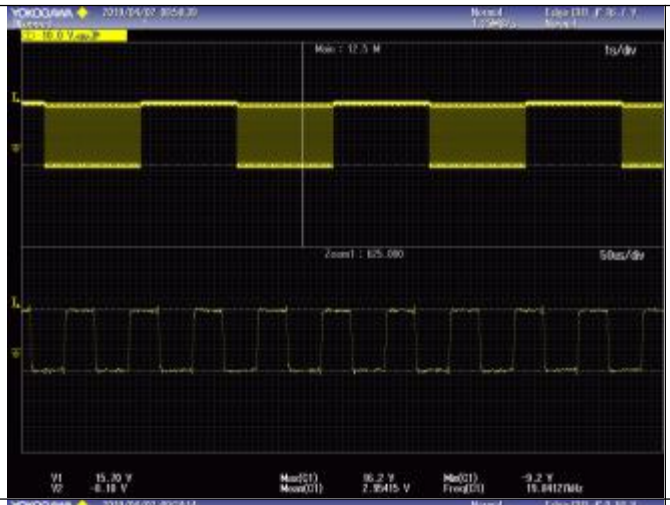	High level +15V±1V； Low level -8V±1V； Frequency 20KHz；
Main and battery SCR S1,S2,S3,S4,S5,S6,S7,S8,S9,S10,S11,S12		High level 1V-1.5V； Low level 0V；

If it is found that the individual IGBT or SCR drive is abnormal during the drive test, please re-check whether the device is replaced, and check whether the corresponding drive module is damaged.

6.2 Maintenance of IP/OP board

6.2.1 Maintenance of 10kVA IP/OP board

10kVA IP/OP board mainly includes auxiliary power supply, charger, input filter, output filter and mains soft start circuit. Among them, the fragile components are shown in Table 6-9, and the position of the board is shown in Fig 6-9.

Table 6-9 The frogile components of 10kVA IP/OP board

Components	Tag Number	Specifications	Alternative specification
Input/Output Fuse	F1,F3,F5,F8,F10,F12	324-0324030	
Battery Fuse	F15,F16	100A/690V	
Charger Fuse	F13,F14	10A/250V	
Charger IGBT	Q23,Q24	IKW30N65H5	JT050N065WED
Charger Diode	D9,D10,D33,D34	RHRP3060	MM30FU60K

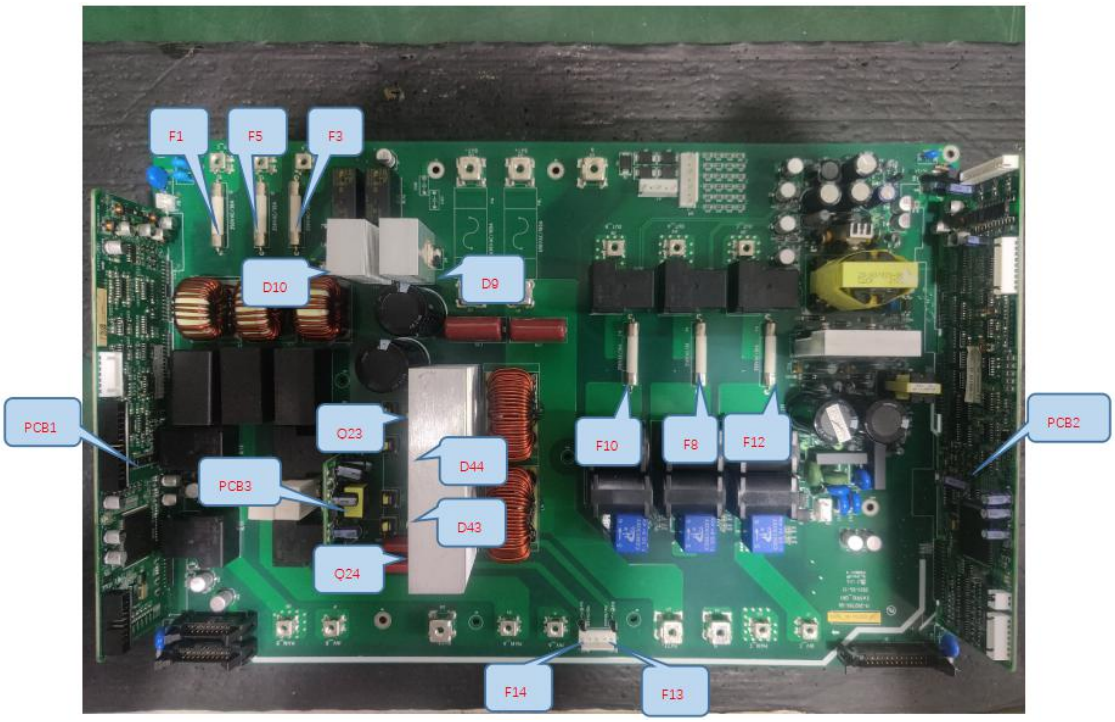

Fig.6-9 The key components identification of 10kVA IP/OP board

The detailed maintenance steps are as follows:

Step 1: Check whether the copper foil is corroded and rusted on the entire I/O board. You can use a multimeter to assist in the inspection. If there is corrosion, the copper foil needs to be re-soldered.

Step 2: Visually inspect the entire I/O board for obvious burns or explosions, and replace if necessary.

Step 3: Use the diode gear of the multimeter to detect the PIN1(+)-PIN3(-) and PIN2(+)-PIN3(-) of the charger IGBT. If the multimeter shows that the voltage drop is too low (less than 0.1V), you need to Replace the corresponding IGBT.

Step 4: Use the multimeter diode gear to detect the driving Zener diode corresponding to the IGBT. If the multimeter shows that the voltage drop is too low (less than 0.1V), the corresponding Zener diode needs to be replaced.

Note: If the IGBT is found to be damaged in step 3, the corresponding driving Zener diode will also be damaged.

Step 5: Use the diode gear of the multimeter to test the diode of the charger. If the forward voltage drop is too low (less than 0.1V) or there is a voltage drop in the reverse direction, the diode may be damaged and needs to be replaced.

Note: When replacing IGBT, diodes and SCR, it is necessary to smear heat dissipation paste on the back of the devices. If the corresponding insulating gaskets are blackened, burned, burned through, burned, etc., they also need to be replaced together.

After completing the inspection work in steps 1-5, replace the damaged device; after replacing the device, use the shorting cap to short-circuit J2 of the rectifier control board CT1 and J2 of the inverter control board CT2,

and then follow the steps shown in Figure 6-10. Connection method for drive test. The test waveforms of each key device are shown in Table 6-10.

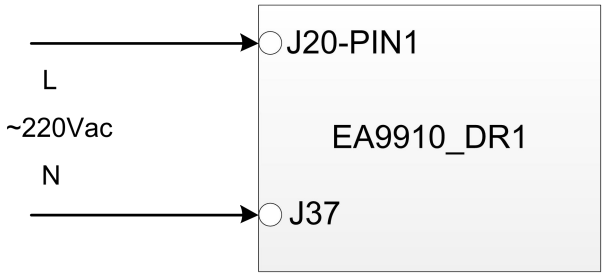

Fig.6-10 The connection of drive test circuit of 10kVA IP/OP board

Table 6-10 The driver test description of 10kVA IP/OP board

Component and its tag number	Waveform	Remark
Charger IGBT Q23,Q24	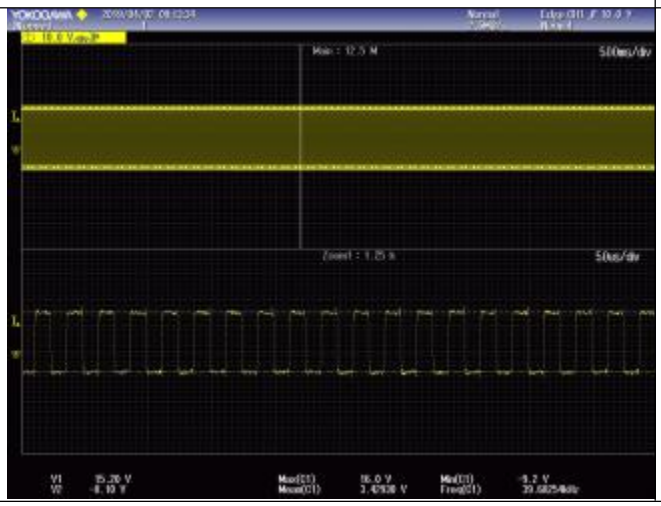	High level +15V±1V； Low level -8V±1V； Frequency 40KHz；

If it is found that the individual IGBT drive wareform is abnormal during the drive test, please re-check whether the device is replaced, and check whether the corresponding drive module is damaged.

6.2.2 Maintenance of 15kVA IP/OP board

15kVA IP/OP board mainly includes auxiliary power supply, charger, input filter, output filter and mains soft start circuit. Among them, the fragile components are shown in Table 6-11, and the position of the board is shown in Fig 6-11.

Table 6-11 The frogile components of 15kVA IP/OP board

Components	Tag Number	Specifications	Alternative specification
Input/Output Fuse	F1,F3,F5,F8,F10,F12	324-0324030	
Battery Fuse	F15,F16	100A/690V	
Charger Fuse	F13,F14	10A/250V	
Charger IGBT	Q23,Q24	IKW30N65H5	JT050N065WED
Charger Diode	D9,D10,D43,D44	RHRP3060	MM30FU60K

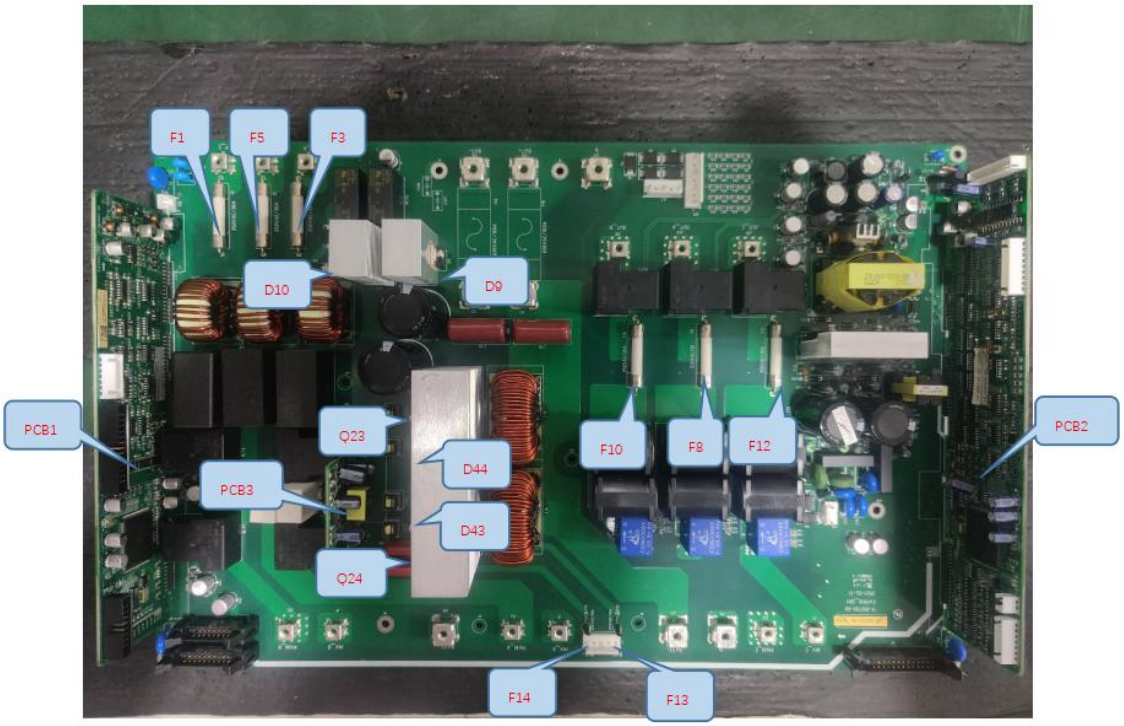

Fig.6-11 The key components identification of 15kVA IP/OP board

The detailed maintenance steps are as follows:

Step 1: Check whether the copper foil is corroded and rusted on the entire I/O board. You can use a multimeter to assist in the inspection. If there is corrosion, the copper foil needs to be re-soldered.

Step 2: Visually inspect the entire I/O board for obvious burns or explosions, and replace if necessary.

Step 3: Use the diode gear of the multimeter to detect the PIN1(+)-PIN3(-) and PIN2(+)-PIN3(-) of the charger IGBT. If the multimeter shows that the voltage drop is too low (less than 0.1V), you need to Replace the corresponding IGBT.

Step 4: Use the multimeter diode gear to detect the driving Zener diode corresponding to the IGBT. If the multimeter shows that the voltage drop is too low (less than 0.1V), the corresponding Zener diode needs to be replaced.

Note: If the IGBT is found to be damaged in step 3, the corresponding driving Zener diode will also be damaged.

Step 5: Use the diode gear of the multimeter to test the diode of the charger. If the forward voltage drop is too low (less than 0.1V) or there is a voltage drop in the reverse direction, the diode may be damaged and needs to be replaced.

Note: When replacing IGBT, diodes and SCR, it is necessary to smear heat dissipation paste on the back of the devices. If the corresponding insulating gaskets are blackened, burned, burned through, burned, etc., they also need to be replaced together.

After completing the inspection work in steps 1-5, replace the damaged device; after replacing the device, use the shorting cap to short-circuit J2 of the rectifier control board CT1 and J2 of the inverter control board CT2,

and then follow the steps shown in Figure 6-12. Connection method for drive test. The test waveforms of each key device are shown in Table 6-12.

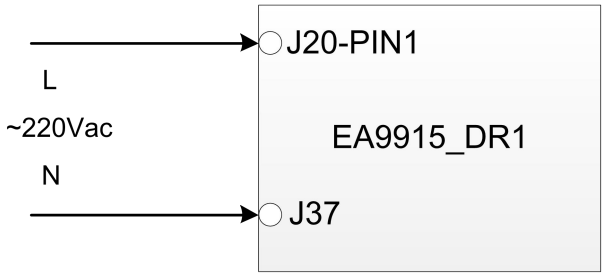

Fig.6-12 The connection of drive test circuit of 15kVA IP/OP board

Table 6-12 The driver test description of 15kVA IP/OP board

Component and its tag number	Waveform	Remark
Charger IGBT Q23,Q24	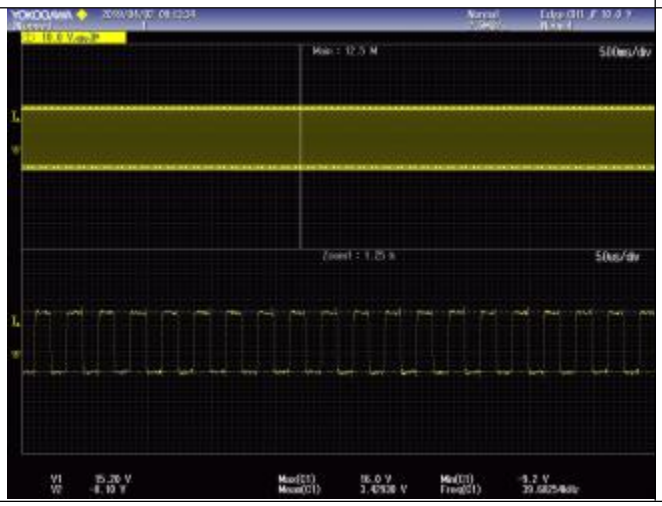	High level +15V±1V； Low level -8V±1V； Frequency 40KHz；

If it is found that the individual IGBT drive wareform is abnormal during the drive test, please re-check whether the device is replaced, and check whether the corresponding drive module is damaged.

6.2.3 Maintenance of 20kVA IP/OP board

20kVA IP/OP board mainly includes auxiliary power supply, charger, input filter and output filter. Among them, the fragile components are shown in Table 6-13, and the position of the board is shown in Fig 6-13.

Table 6-13 The frogile components of 20kVA IP/OP board

Components	Tag Number	Specifications	Alternative specification
Input/Output Fuse	F1,F2,F3,F4,F5,F6,F8,F9,F10,F11,F12,F13	324-0324030	
Battery Fuse	F15,F16	100A/690V	
Charger Fuse	F13,F14	10A/250V	
Charger IGBT	Q23,Q24	IKW30N65H5	JT050N065WED
Charger Diode	D9,D10,D43,D44	RHRP3060	MM30FU60K

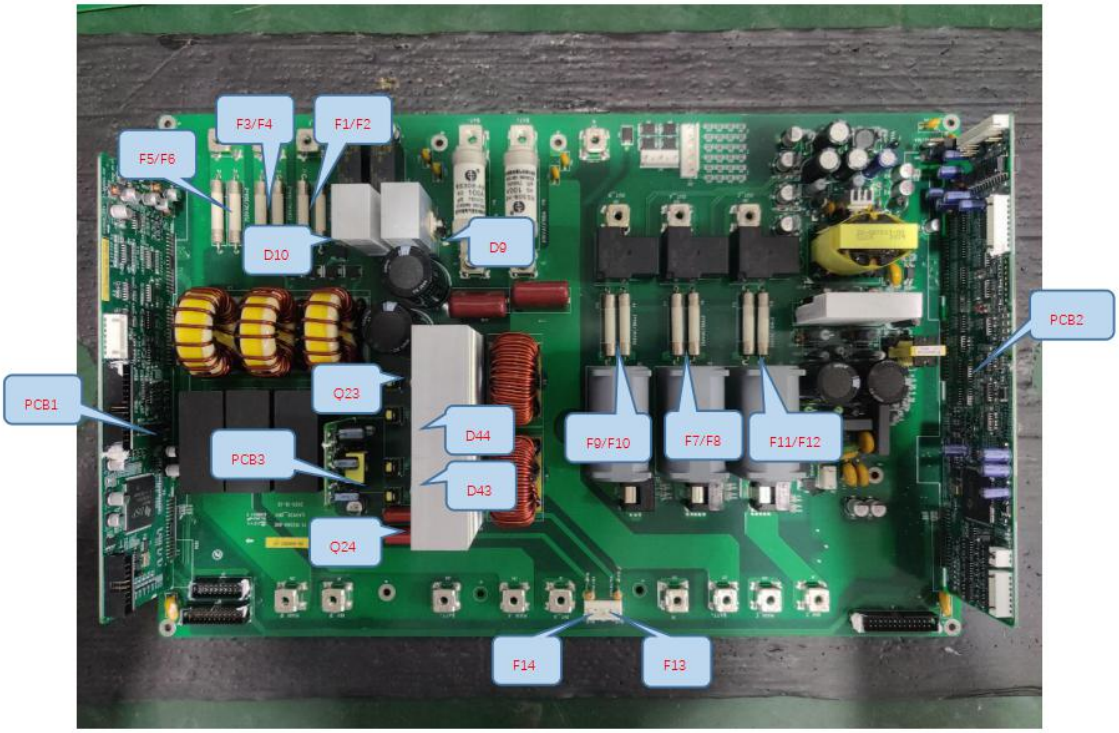

Fig.6-13 The key components identification of 20kVA IP/OP board

The detailed maintenance steps are as follows:

Step 1: Check whether the copper foil is corroded and rusted on the entire I/O board. You can use a multimeter to assist in the inspection. If there is corrosion, the copper foil needs to be re-soldered.

Step 2: Visually inspect the entire I/O board for obvious burns or explosions, and replace if necessary.

Step 3: Use the diode gear of the multimeter to detect the PIN1(+)-PIN3(-) and PIN2(+)-PIN3(-) of the charger IGBT. If the multimeter shows that the voltage drop is too low (less than 0.1V), you need to Replace the corresponding IGBT.

Step 4: Use the multimeter diode gear to detect the driving Zener diode corresponding to the IGBT. If the multimeter shows that the voltage drop is too low (less than 0.1V), the corresponding Zener diode needs to be replaced.

Note: If the IGBT is found to be damaged in step 3, the corresponding driving Zener diode will also be damaged.

Step 5: Use the diode gear of the multimeter to test the diode of the charger. If the forward voltage drop is too low (less than 0.1V) or there is a voltage drop in the reverse direction, the diode may be damaged and needs to be replaced.

Note: When replacing IGBT, diodes and SCR, it is necessary to smear heat dissipation paste on the back of the devices. If the corresponding insulating gaskets are blackened, burned, burned through, burned, etc., they also need to be replaced together.

After completing the inspection work in steps 1-5, replace the damaged device; after replacing the device, use the shorting cap to short-circuit J2 of the rectifier control board CT1 and J2 of the inverter control board CT2,

and then follow the steps shown in Figure 6-14. Connection method for drive test. The test waveforms of each key device are shown in Table 6-14.

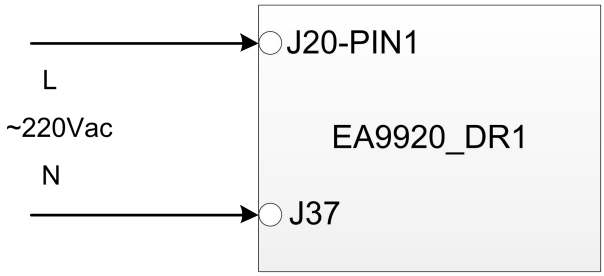

Fig.6-14 The connection of drive test circuit of 20kVA IP/OP board

Table 6-14 The driver test description of 20kVA IP/OP board

Component and its tag number	Waveform	Remark
Charger IGBT Q23,Q24	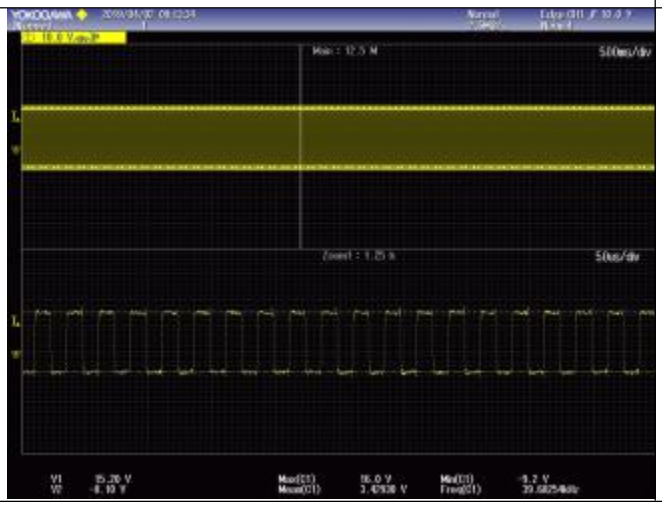	High level +15V±1V； Low level -8V±1V； Frequency 40KHz；

If it is found that the individual IGBT drive wareform is abnormal during the drive test, please re-check whether the device is replaced, and check whether the corresponding drive module is damaged.

6.2.4 Maintenance of 30kVA IP/OP board

30kVA IP/OP board mainly includes auxiliary power supply, charger, input filter and output filter. Among them, the fragile components are shown in Table 6-15, and the position of the board is shown in Fig 6-15.

Table 6-15 The frogile components of 30kVA IP/OP board

Components	Tag Number	Specifications	Alternative specification
Input/Output Fuse	F4,F5,F6,F25,F26,F27	100A/690V	
Battery Fuse	F13,F14	10A/250V	
Charger Fuse	Q19,Q20	IKW40N65H5	JT050N065WED
Charger IGBT	D9,D10,D6,D7	RHRP3060	MM30FU60K

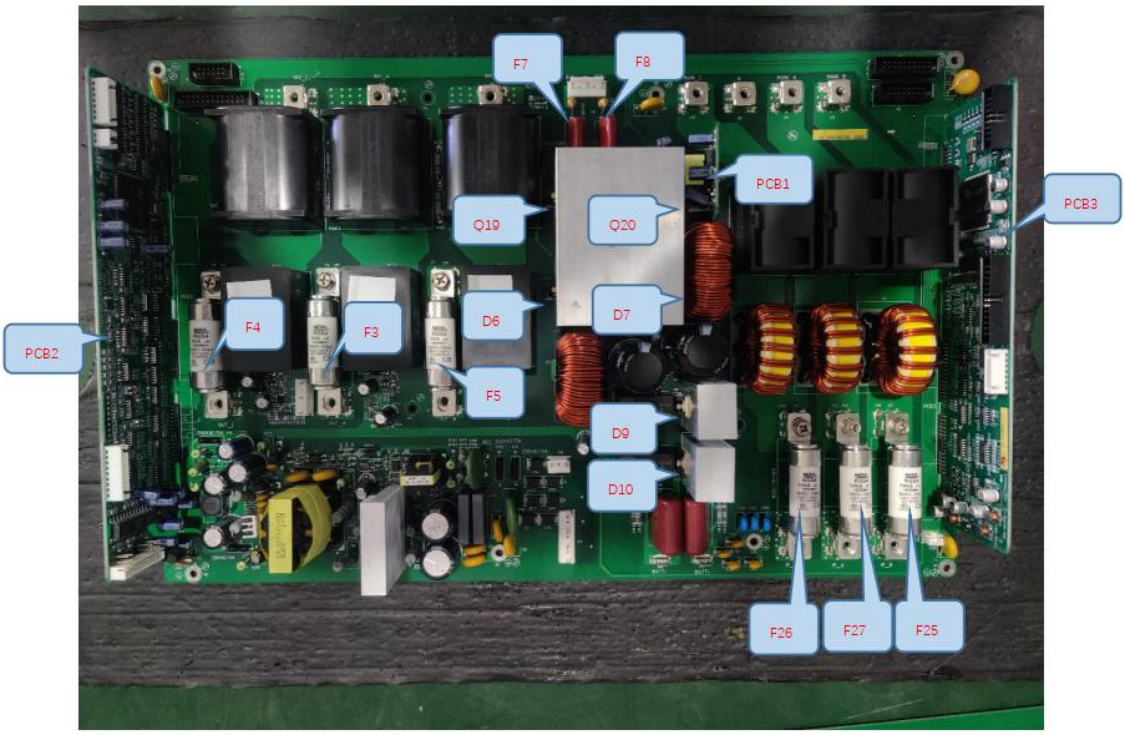

Fig.6-15 The key components identification of 30kVA IP/OP board

The detailed maintenance steps are as follows:

Step 1: Check whether the copper foil is corroded and rusted on the entire I/O board. You can use a multimeter to assist in the inspection. If there is corrosion, the copper foil needs to be re-soldered.

Step 2: Visually inspect the entire I/O board for obvious burns or explosions, and replace if necessary.

Step 3: Use the diode gear of the multimeter to detect the PIN1(+)-PIN3(-) and PIN2(+)-PIN3(-) of the charger IGBT. If the multimeter shows that the voltage drop is too low (less than 0.1V), you need to Replace the corresponding IGBT.

Step 4: Use the multimeter diode gear to detect the driving Zener diode corresponding to the IGBT. If the multimeter shows that the voltage drop is too low (less than 0.1V), the corresponding Zener diode needs to be replaced.

Note: If the IGBT is found to be damaged in step 3, the corresponding driving Zener diode will also be damaged.

Step 5: Use the diode gear of the multimeter to test the diode of the charger. If the forward voltage drop is too low (less than 0.1V) or there is a voltage drop in the reverse direction, the diode may be damaged and needs to be replaced.

Note: When replacing IGBT, diodes and SCR, it is necessary to smear heat dissipation paste on the back of the devices. If the corresponding insulating gaskets are blackened, burned, burned through, burned, etc., they also need to be replaced together.

After completing the inspection work in steps 1-5, replace the damaged device; after replacing the device, use the shorting cap to short-circuit J2 of the rectifier control board CT1 and J2 of the inverter control board CT2,

and then follow the steps shown in Figure 6-16. Connection method for drive test. The test waveforms of each key device are shown in Table 6-16.

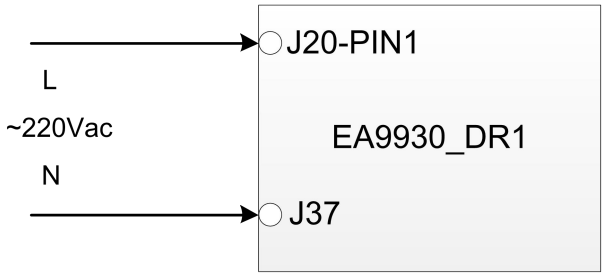

Fig.6-16 The connection of drive test circuit of 30kVA IP/OP board

Component and its tag number	Waveform	Remark
Charger IGBT Q19,Q20		High level +15V±1V; Low level -8V±1V; Frequency 40KHz;

Table 6-16 The driver test description of 30kVA IP/OP board

If it is found that the individual IGBT drive wareform is abnormal during the drive test, please re-check whether the device is replaced, and check whether the corresponding drive module is damaged.

6.3 Maintenance of Bypass board

6.3.1 Maintenance of 10kVA bypass board

The 10kVA bypass board mainly includes bypass output circuit and output current sampling circuit. Tthe frogile component of bypass board is bypass SCR, which are shown in Table 6-17, and its position in the board is shown in Figure 6-17.

Table 6-17 The frogile components of 10kVA bypass board

Components	Tag Number	Specifications	Alternative specification
Bypass SCR	Q1,Q2,Q3,Q4,Q5,Q6	VS-40TPS12A-M3	BT155W-1200T

Fig.6-17 The key components identification of 10kVA bypass board

The detailed maintenance steps are as follows:

Step 1: Check whether the copper foil is corroded and rusted on the entire I/O board. You can use a multimeter to assist in the inspection. If there is corrosion, the copper foil needs to be re-soldered.

Step 2: Visually inspect the entire I/O board for obvious burns or explosions, and replace if necessary.

Step 3: Measure the resistance of the bypass thyristor (SCR) with the ohm gear of the multimeter. The normal resistance should be around 20Ω. If not, it needs to be replaced.

Note: When replacing the SCR, it is necessary to apply thermal paste on the back of the device. If the corresponding insulating gasket is blackened, burned, burned through, burned, etc., it needs to be replaced together.

After completing the inspection work in steps 1-3, replace the damaged device; after replacing the device, use the shorting cap to short-circuit J2 of the rectifier control board CT1 and J2 of the inverter control board CT2, and then follow the steps shown in Figure 6-18. Connection method for drive test. The test waveforms of each key device are shown in Table 6-18.

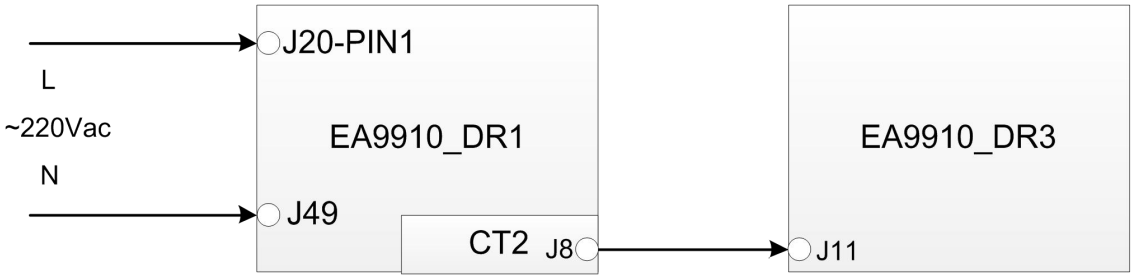

Fig.6-18 The connection of drive test circuit of 10kVA bypass board

Table 6-18 The driver test description of 10kVA bypass board

Component and its tag number	Waveform	Remark
Bypass SCR Q1,Q2,Q3,Q4,Q5,Q6		High level 1V-1.5V； Low level 0V；

If it is found that the individual SCR is abnormally driven during the drive test, please re-check whether the device is replaced, and check whether the corresponding drive module is damaged.

6.3.2 Maintenance of 15kVA/20kVA bypass board.

The 15kVA and 20kVA model share the bypass board, and the board mainly includes the bypass output circuit and the output current sampling circuit. Among them, the frogile components have bypass SCR, which are shown in Table 6-19, and its position in the board is shown in Figure 6-19.

Table 6-19 The forgile components 15/20kVA bypass board

Components	Tag Number	Specifications	Alternative specification
Bypass SCR	Q1,Q2,Q3,Q4,Q5,Q6	VS-50TPS12A	BT155W-1200T

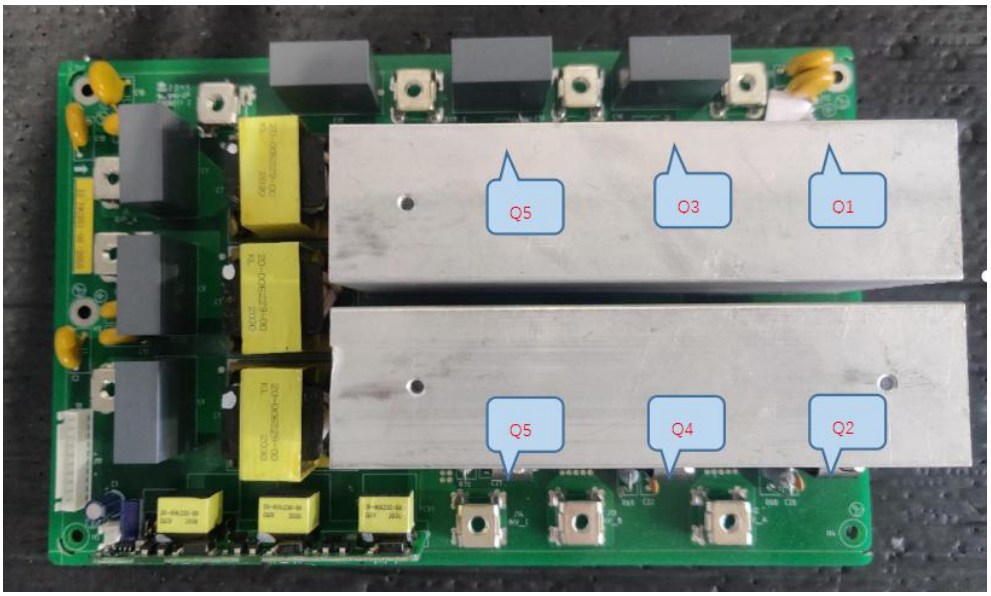

Fig.6-19 The key components identification of 15/20kVA bypass board

The detailed maintenance steps are as follows:

Step 1: Check whether the copper foil is corroded and rusted on the entire I/O board. You can use a multimeter to assist in the inspection. If there is corrosion, the copper foil needs to be re-soldered.

Step 2: Visually inspect the entire I/O board for obvious burns or explosions, and replace if necessary.

Step 3: Measure the resistance of the bypass thyristor (SCR) with the ohm gear of the multimeter. The normal resistance should be around 20Ω. If not, it needs to be replaced.

Note: When replacing the SCR, it is necessary to apply thermal paste on the back of the device. If the corresponding insulating gasket is blackened, burned, burned through, burned, etc., it needs to be replaced together.

After completing the inspection work in steps 1-3, replace the damaged device; after replacing the device, use the shorting cap to short-circuit J2 of the rectifier control board CT1 and J2 of the inverter control board CT2, and then follow the steps shown in Figure 6-20. Connection method for drive test. The test waveforms of each key device are shown in Table 6-20.

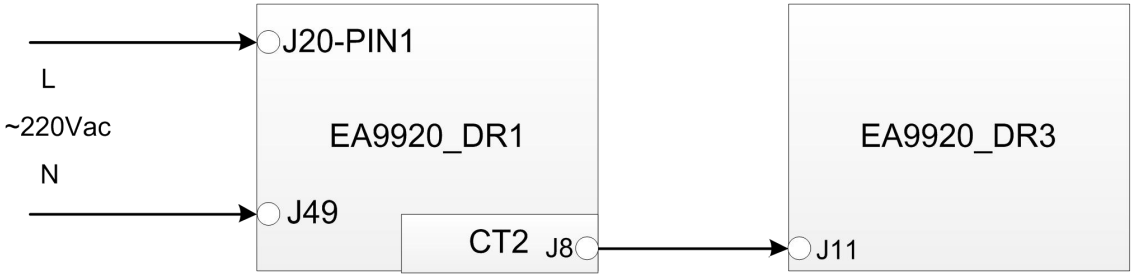

Fig.6-20 The connection of drive test circuit of 15/20kVA bypass board

Table 6-20 The driver test description of 15/20kVA bypass board

Component and its tag number	Waveform	Remark
Bypass SCR Q1,Q2,Q3,Q4,Q5,Q6		High level 1V-1.5V； Low level 0V；

If it is found that the individual SCR is abnormally driven during the drive test, please re-check whether the device is replaced, and check whether the corresponding drive module is damaged.

6.3.3 Maintenance of 30kVA bypass board

The 30kVA bypass board mainly includes bypass output circuit and output current sampling circuit. Among them, the forgile component is bypass SCR, which is shown in Table 6-21, and its position in the board is shown in Fig.6-21.

Table 6-21 The frogile component of 30kVA bypass board

Components	Tag Number	Specifications	Alternative specification
Bypass SCR	Q1,Q2,Q3,Q4,Q5,Q6	VS-70TPSPBF	

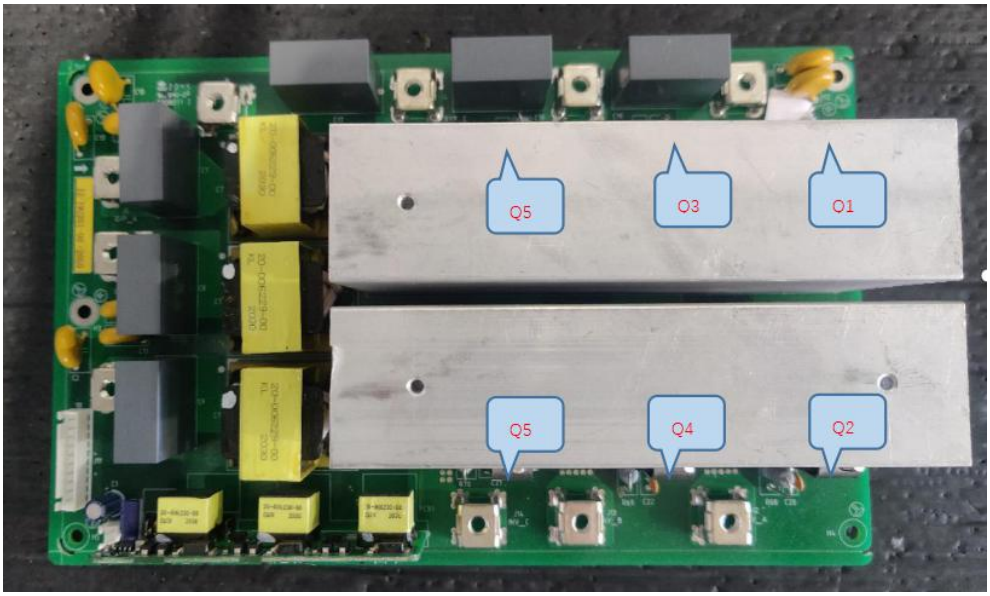

Fig.6-21 The key components identification of 30kVA bypass board

The detailed maintenance steps are as follows:

Step 1: Check whether the copper foil is corroded and rusted on the entire I/O board. You can use a multimeter to assist in the inspection. If there is corrosion, the copper foil needs to be re-soldered.

Step 2: Visually inspect the entire I/O board for obvious burns or explosions, and replace if necessary.

Step 3: Measure the resistance of the bypass thyristor (SCR) with the ohm gear of the multimeter. The normal resistance should be around 20Ω. If not, it needs to be replaced.

Note: When replacing the SCR, it is necessary to apply thermal paste on the back of the device. If the corresponding insulating gasket is blackened, burned, burned through, burned, etc., it needs to be replaced together.

After completing the inspection work in steps 1-3, replace the damaged device; after replacing the device, use the shorting cap to short-circuit J2 of the rectifier control board CT1 and J2 of the inverter control board CT2, and then follow the steps shown in Figure 6-20. Connection method for drive test. The test waveforms of each key device are shown in Table 6-20.

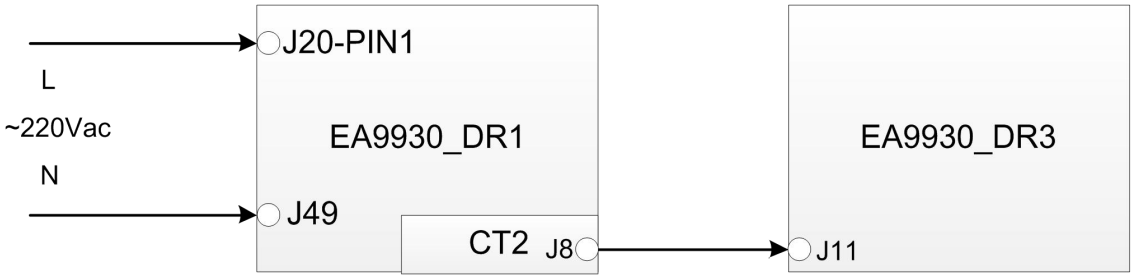

Fig.6-20 The connection of drive test circuit of 30kVA bypass board

Table 6-20 The driver test description of 30kVA bypass board

Component and its tag number	Waveform	Remark
Bypass SCR Q1,Q2,Q3,Q4,Q5,Q6		High level 1V-1.5V； Low level 0V；

If it is found that the individual SCR is abnormally driven during the drive test, please re-check whether the device is replaced, and check whether the corresponding drive module is damaged.

7 Test

This chapter mainly introduces how to test the UPS after maintenance.

7.1 Boards installation

After the maintenance of the abnormal board is completed, it needs to be installed on the whole machine for debugging to confirm whether the single board is fixed.

Please install the repaired board on the whole machine according to the content in Chapter 5, and ensure that the installed position is correct and the wiring is correct.

7.2 Preparation before power-on

1>Check and confirm that the veneer inside the machine is well installed.

2>Check and confirm that the internal wiring of the machine is correct.

3>Check whether the connection of the cable is tight.

4>Check that the polarity and sequence of the DC source input cables are correct.

5>Check whether all wiring is neat, whether there is looseness, and whether the binding of cables meets the process specifications.

6>Check whether the grounding is reliable.

7>The operator must wear insulating shoes.

7.3 Power-on and testing

Step 1: Set the output voltage of the AC source to the rated input of the machine (220V/50Hz or 60Hz) and limit the output current to 10A.

Step 2: Close the bypass circuit breaker, and after the UPS is powered on and the display screen is lit, use the IServiceTool II monitoring software to check whether the parameters on the "parameter display" and "parameter setting" interfaces are normal; (if it is a rack-mounted machine, skip this step)

Step 3: Close the main circuit input breaker of the machine, wait for the UPS to automatically start the rectifier and inverter, and run in the mains inverter mode. If it is a rack-mounted machine, check the parameters of the "parameter display" and "parameter setting" interface in this step.

Step 4: Close the positive and negative battery breaker, connect the battery pack to the UPS, and check whether the battery voltage displayed by the UPS is normal at this time. After waiting for two minutes, measure the battery current through the LCD panel to check whether the positive and negative battery packs start to charge;

Step 5: Click "Control" -> "Maintenance" -> "Battery Test 1" on the screen (password login is required) to test the battery self-test mode. After the test is completed, the UPS will switch back to the mains inverter mode. Then, click "Control" on the screen -> "Switch" -> "Disconnect output", turn off the UPS; and open the main circuit input circuit breaker, bypass circuit breaker and battery pack circuit breaker respectively.

Step 6: 5 minutes after the UPS is completely powered off, re-close the battery pack air switch; press the cold start switch until the LCD screen of the UPS lights up (about 3seconds), and then click the "cold start" button on the screen to start the battery cold start. The UPS operates in battery inverter mode.

Note: If the machine can work normally in battery mode, mains mode, and battery self-check mode, it means that the UPS has been repaired, and you can proceed to the next step. If the above operations are performed and the machine works abnormally, it is necessary to further find the problem and repair it.

Step 7: Close the main circuit input circuit breaker and bypass circuit breaker, and wait for the UPS to switch to the mains inverter mode. In the "mains inverter mode" and "battery self-test mode", the output load is 50%, and check whether the input and output voltage and current of the UPS are normal. If the UPS can work normally, the UPS has been repaired. If it is not working properly, then the problem needs to be further investigated and repaired.

Reminder: If possible, try to use an oscilloscope and a isolated probe to measure the waveforms of + BUS, -BUS, INV voltage, output current, etc. during the above operation. This is more helpful to judge whether the UPS is repaired or not.