Table of Contents

1 Safety and General Information 1
1.1 General Information 1
1.2 UPS Safety 1
1.3 Battery Safety 2
1.4 Description of Symbols 3
2 Product Overview 4
2.1 Product Description 4
2.2 Working Principle 4
2.2.1 Schematic Diagram 4
2.2.2 Operating Mode 4
2.3 System Structure 7
2.3.1 Product Structure 7
2.3.2 Power Module 9
2.3.3 Bypass Module 9
2.3.4 Control Module 10
2.4 Optional Accessories 10
3 Installation 11
3.1 Installation Preparations 11
3.1.1 Site 11
3.1.2 Installation Tools 12
3.1.3 Preparing Power Cables 12
3.1.4 Unpacking 14
3.2 Installation of Single UPS System 15
3.2.1 UPS Installation 15
3.2.2 Install Tightening Components 15
3.2.3 Install Batteries 16
3.2.4 Connect Power Cables 16
3.2.5 Connect the Ground Cable 22
3.2.6 Communication Signal Interface 23
3.2.7 Modules with Hot-swap 27
3.3 Installation of Parallel UPS System 29
3.3.1 Connect Power Cables 29
3.3.2 Connect Control Cables 30
3.4 Installation Inspection 31
4 UPS Display Interface 32
4.1 Monitoring Display Unit 32
4.1.1 Display Panel 32
4.1.2 LCD and Indicator Lights 32
4.2 Display Interface 33

4.2.1 Overview 33
4.2.2 Home Page 34
4.2.3 System 35
4.2.4 Alarm 45
4.2.5 Control 47
4.2.6 Settings 50
5 Operation 66
5.1 Operation of Single UPS System 66
5.1.1 Turn On the UPS 66
5.1.2 Turn Off the UPS 68
5.1.3 Battery Cold Start 69
5.1.4 Transfer to Bypass Operation by Manual 69
5.1.5 Transfer to Maintenance Bypass 70
5.1.6 Power Supply Restored from Maintenance Bypass to Inverter 70
5.1.7 Emergency Power Off (EPO) 71
5.1.8 EPO Recovery 71
5.1.9 Firmware Upgrade 71
5.2 Operation of Parallel UPS System 73
5.2.1 Start Up Parallel System 73
5.2.2 Shut Down Parallel System 76
5.2.3 EPO 76
5.2.4 Single UPS Unit Exit the Parallel System 76
5.2.5 Add a Single UPS to the Parallel System 76
6 Maintenance 77
6.1 UPS Maintenance 77
6.1.1 Monthly Maintenance 77
6.1.2 Quarterly Maintenance 77
6.1.3 Annual Maintenance 78
6.2 Battery Maintenance 78
7 Troubleshooting 79
8 Technical Parameters 80
Appendix 1 Display Menu 82
Appendix 2 Alarm List 89
Appendix 3 Abbreviations 100
Software Download & Installation 101

1 Safety and General Information

1.1 General Information

- Please read the "safety precautions" carefully before installing and using this product to ensure correct and safe installation and use. Please keep this manual properly.
- UPS must be installed, tested and maintained by an engineer authorized by the manufacturer or its agent, otherwise it is possible to endanger personal safety and cause equipment failure. The damage to UPS caused thereon is excluded from the warranty.
- Under no circumstances shall equipment structure or components be dismantled or changed without the manufacturer's permission, otherwise the damage to UPS caused thereby shall not be covered by the warranty.
- Local regulations and laws shall be followed when using equipment. The safety precautions in the manual only supplement the local safety regulations.
- Due to product version upgrade or other reasons, the content of this document will be updated from time to time. Unless otherwise agreed, this document is used only as a guide, and all statements, information and recommendations in this document do not constitute any warranty, express or implied.

1.2 UPS Safety

- Before installing the equipment, wear insulating protective clothing, use insulating appliances, and remove conductive objects such as jewelry and watches to avoid electric shock or burns.
- The operating environment has a certain impact on the service life and reliability of UPS. The environmental requirements set in the manual must be followed when using and storing the equipment.
- Avoid using the equipment in direct sunlight, rain, or in environments with electrified dust.
- When placing UPS, maintain a safe distance around it to ensure ventilation. During operation of the system, do not block the vent.
- Do not allow liquids or other foreign objects to enter into the UPS cabinet or cabinet.
- Before using UPS, check whether the local distribution characteristics are consistent with the information of the product nameplate.
- As UPS is a large leakage current device, it is not recommended to install breakers with leakage protection function.
- Before connecting UPS, please further confirm whether the switch connecting the power supply of the UPS mains input/bypass power supply and the mains power are disconnected.
- When it is required to move or rewire UPS, make sure to disconnect AC input power supply, battery and other inputs, and UPS is fully powered down (more than 5min) before carrying out the corresponding operation, otherwise there may still be power in the port and inside of the equipment, and it is possible to cause a risk of electric shock.

- Before powering on, please confirm the correct grounding, and check wire connection and battery polarity to ensure correct connection. In order to ensure personal safety and the normal use of UPS, UPS shall be reliably grounded before use.
- UPS can be used for resistive and capacitive (such as computers), resistive and micro inductive load, not for pure capacitive and inductive load (such as motors, air conditioners and copiers) and half wave rectifier load.
- When cleaning the machine, please wipe it with a dry object. Under no circumstances shall water be used to clean electrical parts inside or outside the cabinet.
- After completion of maintenance operations, check immediately to ensure that no tools or other items are left in the cabinet.
- In case of fire, please use dry powder extinguisher correctly for extinguishment. There is a danger of electric shock if liquid fire extinguishers are used.
- Do not close the breaker before the UPS installation is completed. Do not power on UPS without the permission of a qualified electrician.

1.3 Battery Safety

- Battery installation and maintenance shall only be performed by personnel with battery expertise.
- There is danger of electric shock and short circuit current in the battery. In order to avoid safety accidents, when installing or replacing the battery, please pay attention to the following matters: do not wear jewelry and watches and other conductive objects; use special insulation tools; use facial protection; wear protective insulating clothing; do not turn the battery upside down or tilt it; disconnect the input breaker of the battery.
- The installation environment of the battery must be far away from the hot area, and it is not allowed to use or keep the battery near the fire source. The battery or battery strings cannot be processed by fire, otherwise it is possible cause personal injury due to explosion.
- Environmental factors impact battery life. Elevated ambient temperatures, poor quality utility power, and frequent short duration discharges will shorten battery life.
- The batteries should be regularly replaced to ensure the normal operation of UPS and sufficient backup time.
- Do not use a battery that is not approved by the supplier, as it may adversely affect the operation of the system. Use of a non supplier approved battery will void the manufacturer warranty.
- Check the screws of the connecting parts of the battery regularly to make sure they are tight and not loose. If the screws become loose parts, they must be tightened immediately.
- Please do not short the positive and negative terminals of the battery, otherwise it is possible to cause electric shock or fire.
- Do not touch the wiring terminal of the battery. The battery circuit is not isolated from the input voltage circuit, and there will be a high voltage hazard between the battery terminal and the ground.
- Do not open or damage the battery, otherwise it is possible to cause short circuit and battery leakage and the electrolyte in the battery may cause damage to the skin and eyes. In case of exposure into the electrolyte, wash immediately with plenty of water and go to the hospital for examination.

1.4 Description of Symbols

The following symbols used herein have the following meaning.

Symbols	Description
DANGER	It is used to warn of emergency and dangerous situations which may lead to death or serious bodily injury if not avoided.
WARNING	It is used to warn of potential dangerous situations which will lead to a certain degree of personal injury if not avoided.
CAUTION	It is used to transmit the safety warning information of equipment or environmental, which may lead to equipment damage, data loss, equipment performance degradation or other unpredictable results if not avoided.
NOTICE	It is used for further detailed description of the things, highlighting important/critical information, etc.

2 Product Overview

2.1 Product Description

20 kVA – 200 kVA series UPS is three-phase input and output high-end modular UPS with advanced dual-core DSP control technology. All internal modules (power module, bypass module and control module) are modularly designed and hot swappable. It is featured with higher power density, compact, high performance and superior protection to adapt to different grid environment and provide maximum protection for critical loads in data centers or other important applications.

This series UPS contains 80/100/120 kVA and 160/180/200 kVA cabinet frames. Each power module has an individual power capacity of 20/25/30 kW with output power factor 1.0, and two standard cabinets can be separately fitted with up to 4 - 8 modules to reach 80kVA /kW – 200 kVA / 200 kW power ranges.

Table 2-1 Power ranges configurations

Rack frames	80/100/120kVA	180 kVA	160/200kVA
Max. number of power modules	4	6	8
Output power of single module	20/25/30 kW	30 kW	20/25 kW

2.2 Working Principle

2.2.1 Schematic Diagram

20kVA -200 kVA series UPS adopts on-line double conversion design based on DSP full digital control to provide customers with high efficiency and high power density power supply. Its functional block diagram is shown in Fig. 2-1.

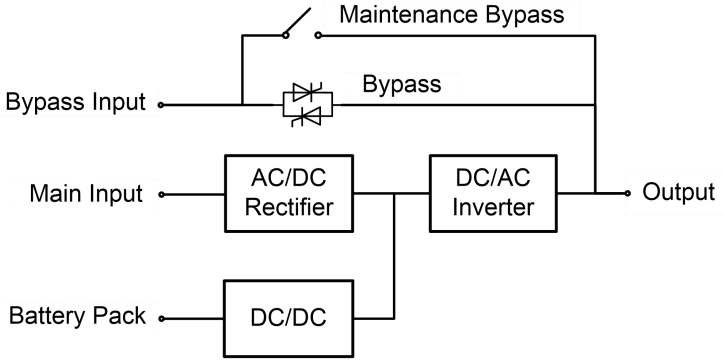

Fig. 2-1 Schematic diagram

2.2.2 Operating Mode

Mains power mode

The mains power mode is the normal operating mode of UPS with following main operation process: the mains input voltage is rectified by the current rectifier, boosted to bus voltage by boosted circuit, and is partially used for charging the battery by DC/DC charger, and partially inverted to AC voltage output by an inverter to provide high quality, continuous and uninterrupted AC power. The working principle of mains power mode is shown in Fig. 2-2.

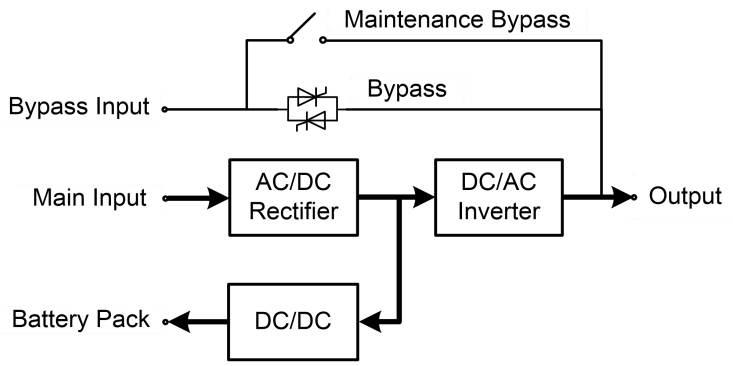

Fig. 2-2 Schematic diagram of mains power mode

Bypass mode

In case of inverter failure, inverter overload or manual switching to bypass state and other faults or operations, UPS will switch the power output from the inverter side to the bypass side, and the bypass power will directly supply power to the load. In the bypass mode, the power supply for the load is not protected by UPS, which may lead to power failure if the bypass input is abnormal.

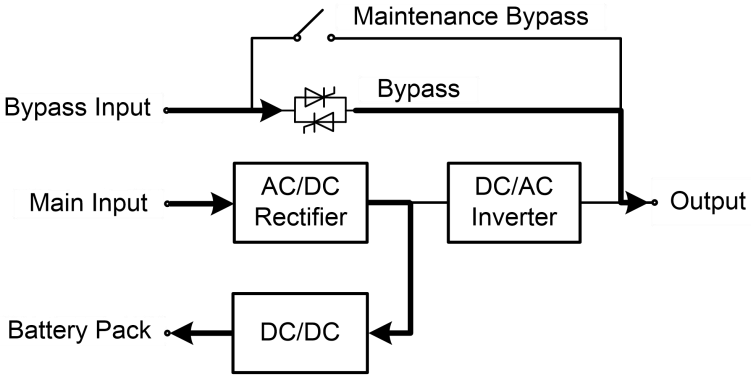

Fig. 2-3 Schematic diagram of bypass mode

Battery mode

When the mains voltage is abnormal, UPS will automatically switch to battery mode. At this time, the power unit will obtain energy from the battery, boost the voltage through the booster circuit, and then provide AC voltage output to the load through the inverter, providing the load with continuous and uninterrupted high quality AC power supply. The operating principle of the battery mode is shown in Fig. 2-4.

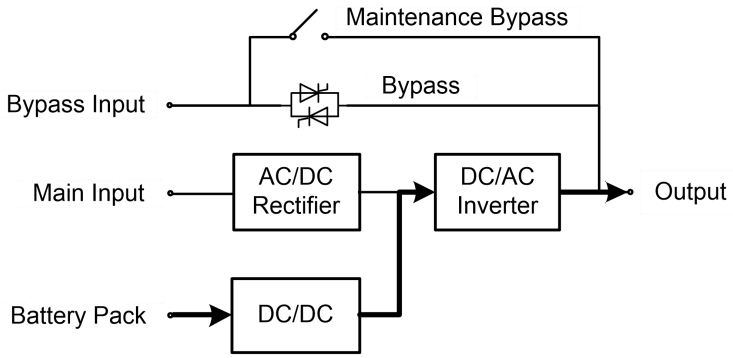

Fig. 2-4 Schematic diagram of battery mode

ECO mode

ECO mode is the economic operation mode of UPS, which can be set through LCD interface. In ECO mode, when the bypass input voltage is within the ECO voltage range, the power is supplied by the bypass and the inverter is in standby state. When the bypass input voltage exceeds the ECO voltage range, the power is supplied to the load by the inverter rather than the bypass. Either by - pass or inverter, the rectifier is on and the charger charges the battery. ECO has higher system efficiency. The working principle of ECO mode is shown in figure 2-6. Regardless of power supply by the bypass or the inverter, the rectifier is On and the battery is charged through the charger. ECO mode has higher system efficiency. The operating principle of ECO mode is shown in Fig. 2-5.

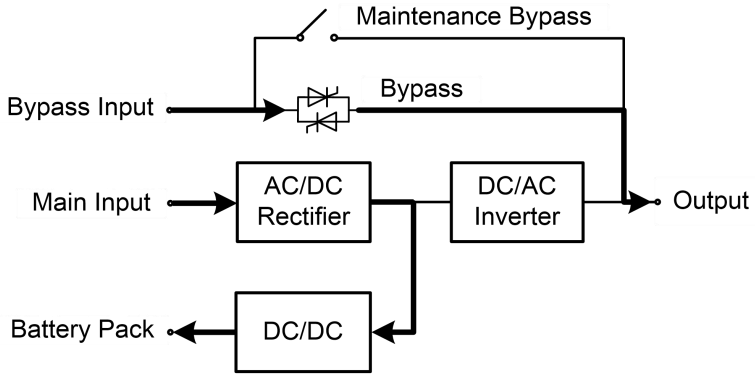

Fig. 2-5 Schematic diagram of maintenance ECO mode

Maintenance bypass mode

If it is required to maintain and repair UPS, the maintenance bypass breaker can be closed. UPS works in the maintenance bypass mode and supplies power through the maintenance bypass line rather than the main power unit. At this time, the replaceable unit in the machine can be maintained. The operating principle of the maintenance bypass mode is shown in Fig. 2-6.

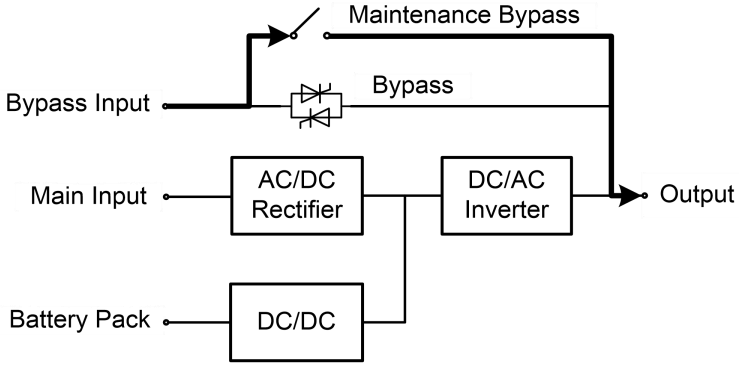

Fig. 2-6 Schematic diagram of maintenance bypass mode

2.3 System Structure

2.3.1 Product Structure

The following figures show the product structure of 80/100/120kVA UPS.

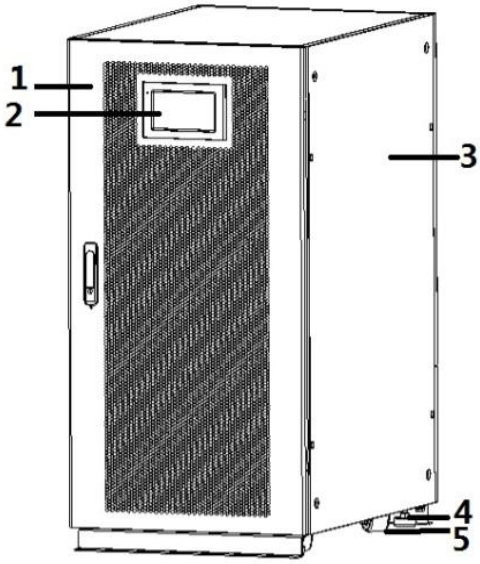

Fig. 2-7 Front view of 80/100/120kVA UPS

1	Front door plate	2	Monitor display unit (MDU)	3	Cabinet
4	Leveling feet	5	Roller		

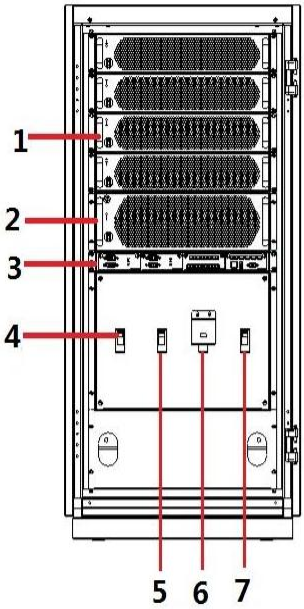

Fig. 2-8 Front view of 80/100/120kVA UPS (with the door open)

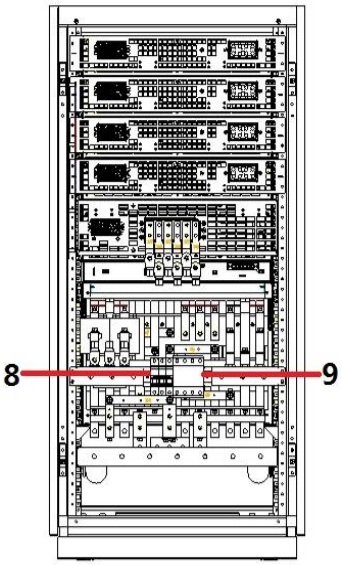

Fig. 2-9 Rear view of 80/100/120kVA UPS

1	Power modules	2	Bypass module	3	Control module
4	Mains input switch	5	Bypass input switch	6	Maintenance bypass switch
7	Output switch	8	AC lightning switch	9	SPD

The following figures show the product structure of 200 kVA UPS.

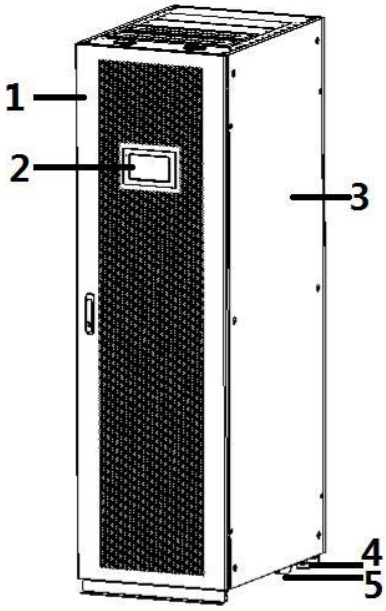

Fig. 2-10 Front view of 160/180/200kVA UPS

1	Front door plate	2	Monitor display unit (MDU)	3	Cabinet
4	Leveling feet	5	Roller		

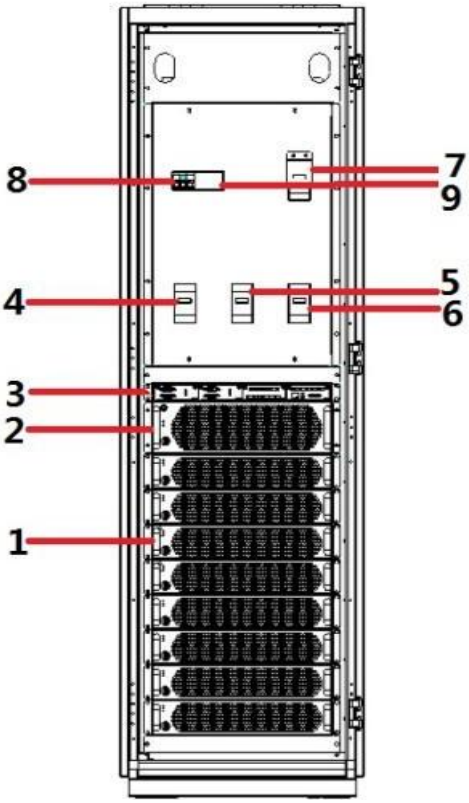

Fig. 2-11 Front view of 160/180/200kVA UPS (with the door open)

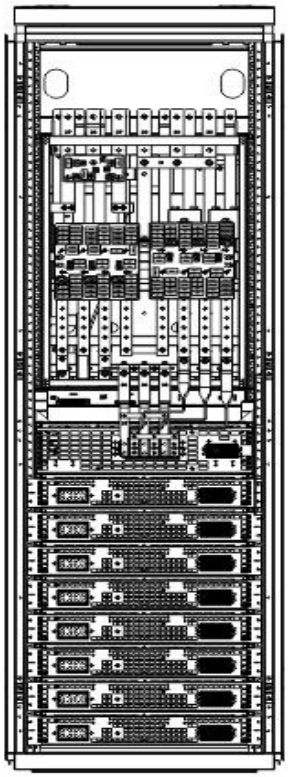

Fig. 2-12 Rear view of 160/180/200kVA UPS

1	Power modules	2	Bypass module	3	Control module
4	Mains input switch	5	Bypass input switch	6	Output switch
7	Maintenance bypass switch	8	AC lightning switch	9	SPD

2.3.2 Power Module

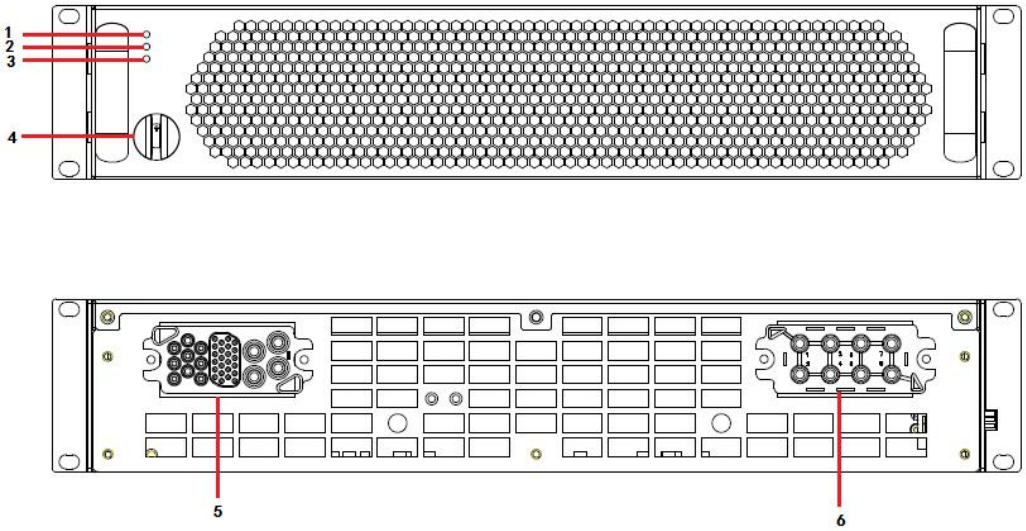

Fig. 2-13 20/25/30 kVA power module

1	Run indicator	2	Alarm indicator	3	Fault indicator
4	Ready switch	5	Output port	6	Input port

2.3.3 Bypass Module

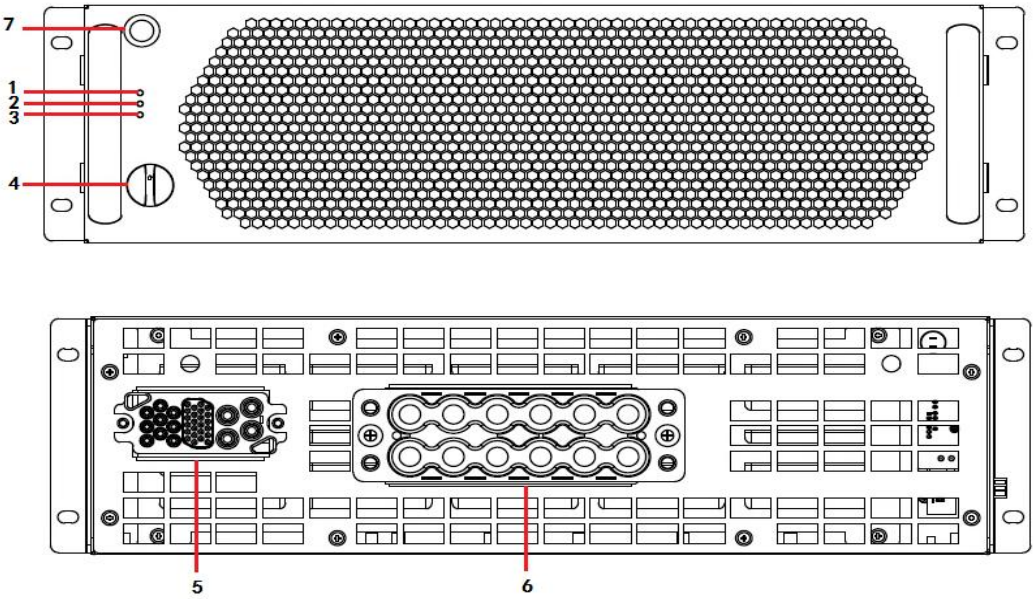

Fig. 2-14 Bypass module

1	Run indicator	2	Alarm indicator	3	Fault indicator
4	Ready switch	5	Signal terminal	6	Power terminal
7	Battery cold start button				

2.3.4 Control Module

The control module contains control board, dry contact board and one monitoring board. The interfaces of control module are shown in figure 2-15.

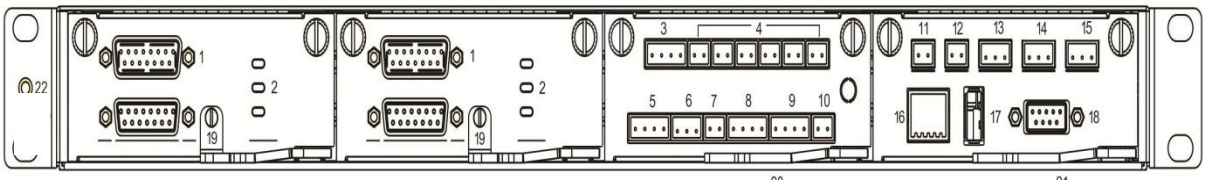

Fig. 2-15 Interfaces of control module

1	Parallel port	2	LED indicator	3	Input dry contacts
4	Output dry contacts	5	Battery ground fault （BTG）port	6	Generator (GEN) port
7	Battery circuit breaker（BCB）port	8	EPO port	9	Switch state port of distribution cabinet
10	SPD port	11	Ambient temp port	12	Battery temperature compensation port
13	CAN port	14	R485 port 1	15	Ethernet port
16	Ethernet port	17	USB port	18	LCD port
19	Plug-in switch of system control boards	20	Plug-in switch of dry contacts board	21	Plug-in switch of monitoring board

2.4 Optional Accessories

Various optional accessories are provided for 20 kVA - 200 kVA series UPS, as shown in Table 2-2, to meet different configuration requirements of users.

Table 2-2 Optional accessories of 20 kVA - 200 kVA UPS

Optional accessories	Function
Wi-Fi module	It is used to achieve remote monitoring through Wi-Fi network, including operation status monitoring, emergency order release, system information reporting and other functions.
4G module	It is used to achieve remote monitoring through 4G data networking, including operation status monitoring, emergency order release, system information reporting and other functions.
Battery monitor	It is used to inspect the voltage and temperature of the single battery and the charging and discharging of the battery string, and communicates with the upper computer by MODBUS communication protocol.
Battery temperature sensor	It is used to detect battery temperature, compensate the charging voltage according to the change the ambient temperature of the battery and prolong the service life of the battery.
Parallel connection cable	It is used for connecting all UPS system for parallel operation.
LBS cable	It is used to the synchronizing signal transmission of the bus of the double bus system.

3 Installation

3.1 Installation Preparations

3.1.1 Site

UPS weights and dimensions

Install the UPS system on a non-flammable, level and solid surface (e.g. concrete) that can support the weight of the UPS, batteries and battery racks. The weight of batteries and battery racks should be calculated according to actual usage. The UPS weights and dimensions are shown in Table 3-1.

Table 3-1 UPS weights and dimensions

Model	Dimensions（W×D×H）	Weight
80/100/120kVA	600 mm × 850 mm × 1200 mm	180 kg
160/180/200kVA	600 mm × 850 mm × 2000 mm	280 kg

Installation environment

- Install the UPS away from water sources, heat sources, and flammable or explosive materials. Keep the UPS away from direct sunlight, dust, volatile gases, corrosive materials, and air dense with salt particles.
- Install the UPS system in a temperature controlled environment free of conductive contaminants and humidity. (The normal operating temperature is 0℃ ~ 40℃. Derating is required if the altitude exceeds 1000 m).

Clearance

Reserve the following clearances around the cabinet to facilitate operations and ventilation:

- Reserve at least 800 mm from the front of the cabinet to facilitate ventilation and operations.
- Reserve at least 500 mm from the top of the cabinet for operations.
- Reserve at least 500 mm from the rear of the cabinet for facilitate ventilation.
- If need to operate in the back of the cabinet, reserve at least 800 mm space.

Take 160/180/200 kVA UPS as an example shown in Fig. 3-1.

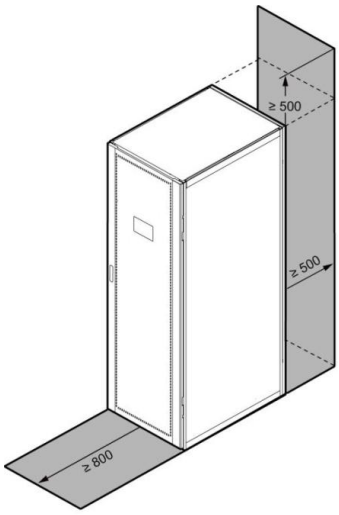

Fig. 3-1 Clearance of 200 kVA UPS (mm)

3.1.2 Installation Tools

	DANGER
	To ensure safety, installation tools for live operation shall be insulated.

Installation tools which may be used in installation process are shown in Table 3-2 and used as needed.

Table 3-2 Installation tools

Tools	Main function	Tools	Main function
Forklift	Handling	Nail hammer	Knock, install and remove components
Herringbone ladder	High-place operation	Rubber hammer	Knock and install components
Clip-on ammeter	Detect current	Percussion drill, drill bit	Drill
Multimeter	Check electrical connection and electrical parameters	Insulating tape	Electrical insulation
Cross screwdriver	Fasten screw	Heat-shrinkable tubing	Electrical insulation
Leveling instrument	Leveling	Heat gun	Heat heat-shrinkable tubing
Insulated monkey wrench	Tighten and loosen bolts	Electrician's knife	Wire stripping
Insulated torque wrench	Tighten and loosen bolts	Cable tie	Bundle
Crimping pliers	Cc cold-pressed terminal	Leather working gloves	Protect operator’s hands
Hydraulic clamp	Clamp OT terminal	Antistatic gloves	Anti-static
Diagonal pliers	Shear cables	Insulating gloves	Insulation
Wire stripper	Wire stripping	Insulated protective shoes	Protect operator

3.1.3 Preparing Power Cables

Table 3-3 Recommended cross-sectional areas for power cables

Item			80/100 /120kVA	160/180/200 kVA
Mains input	Mains input current (A)		235	392
	Recommended cross-sectional area (mm^2)	A/B/C/N	4×95	4×150
Bypass input	Bypass input current (A)		182	304
	Recommended cross-sectional area (mm^2)	A/B/C/N	4×70	4×120
Output	Output current (A)		182	304
	Recommended cross-sectional area (mm^2)	A/B/C/N	4×70	4×120
Battery input	Maximum discharge current of 40 pcs 12 V batteries (A)		264	440
	Recommended cross-sectional area (mm^2)	BAT+/BAT-/N	3×120	3×185
Ground cable	Recommended cross-sectional area (mm^2)	PE	1×50	1×70

Note

- The cables recommended in Table 3-3 are only applicable to the following conditions:
  - Laying method: installed on the wall or floor (IEC60364-5-52)
  - Ambient temperature: 0 - 40 ℃
- When the main and the bypass are same, the input cable is configured according to the mains input cable.
- The current value in the table refers to the data obtained at rated voltage 380 V. The current value needs to be multiplied by 0.95 for the rated voltage 400 V, and 0.92 for 415 V rated voltage.
- When the main load is non-linear load, the n-line section needs to be increased by 1.5-1.7 times.

	WARNING
	• When OT terminals and DT terminals are selected, please strictly follow the parameters specifications as given in Table 3-4 to avoid short circuit. • When connecting the power cable, to comply with the torsion moment, given in table 3-4 to ensure the tightness of terminals, to avoid potential safety hazard.

Table 3-4 Power cable terminals

Model	**Port**	**Bolt size**	**Bolt hole diameter**	**Torque**	**Copper tube terminal**
80/100/120 kVA	Mains input	M10*25	11mm	27N·m	SC95-10
160/180/200 kVA		M12*40	13mm	46N·m	SC150-12
80/100/120 kVA	Bypass input	M10*25	11mm	27N·m	SC70-10
160/180/200 kVA		M12*40	13mm	46N·m	SC120-12
80/100/120 kVA	Battery input	M10*25	11mm	27N·m	SC120-10
160/180/200 kVA		M12*40	13mm	46N·m	SC185-12
80/100/120 kVA	Output	M10*25	11mm	27N·m	SC70-10
160/180/200 kVA		M12*40	13mm	46N·m	SC120-12
80/100/120 kVA	PE	M8*20	10.5mm	13N·m	SC50-8
160/180/200 kVA		M10*25	11mm	27N·m	SC70-10

Table 3-5 Input & output circuit breakers

Input-output breaker	**80/100/120 kVA**	**160/180/200 kVA**
Mains input breaker (standard configuration)	250 A / 3P	400 A / 3P
Bypass input breaker (standard configuration)	250 A / 3P	400 A / 3P
Output breaker (standard configuration)	250 A / 3P	400 A / 3P
Maintenance bypass breaker (standard configuration)	250 A / 3P	400 A / 3P
Battery input breaker (recommended)	DC 400 A / 3P	DC 630 A / 3P

Note

- The mains input breaker, the bypass input breaker and the output breaker are installed in this product as standard configuration.
- As UPS is a large leakage current device, it is not recommended to install breakers with leakage protection function.

- When the input front end is provided with multiple loads, the specification of circuit breaker for the front-level bus configuration must be greater than the specification of the mains input breaker and the bypass input breaker of UPS.
- When the input rear end is provided with multiple loads, the specification of circuit breaker for the front-level bus configuration must be smaller than the specification of the input breaker of UPS.

3.1.4 Unpacking

	CAUTION
⚠	• The equipment must be handled by specially trained personnel. • Handle the equipment with care, and the device. Any impact or fall may cause damage to the equipment.

Procedures:

Step 1: Ensure that the UPS package is not damaged. In case of any damage during transportation, please inform the carrier immediately.

Step 2: Use the forklift to transport the equipment to the designated location.

Step 3: Remove outer packing and remove buffer foam.

Step 4: Remove the moisture barrier bag.

Step 5: Check the integrity of the equipment.

Inspect the appearance of UPS, and check whether UPS is damaged during transportation. If yes, please notify the carrier immediately. Check whether the attached accessories are complete and correct according to the packing list. If the accessories are short or the model is not in accordance with the requirements, timely make on-site records and immediately contact the company or the local office.

Step 6: After confirming that the equipment is in good condition, remove the L-shaped angle support fixed by pallet for fixing the case, as shown in Fig. 3-2.

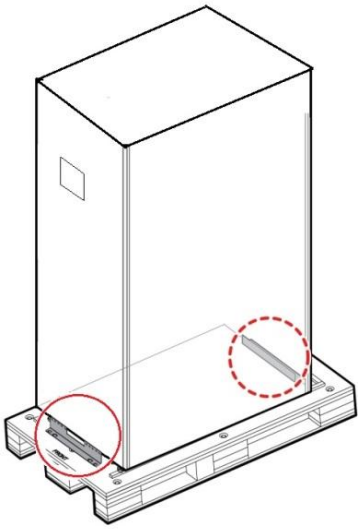

Fig. 3-2 Removal of L-shaped angle support

Step 7: Turn the wrench counterclockwise to raise the four leveling feet at the bottom of UPS until all the four wheels at the bottom of the case are evenly landed and the leveling feet are completely suspended. See Fig. 3-3.

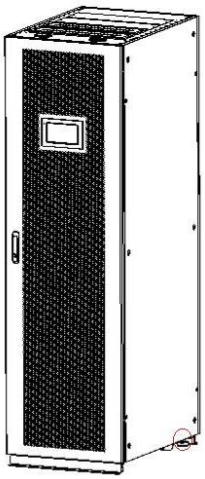

Fig. 3-3 Upward adjustment of leveling feet

Step 8: Use the automatic lift forklift or other equipment to unload the machine, and move the equipment to the installation position by a roller.

3.2 Installation of Single UPS System

3.2.1 UPS Installation

Installation procedures:

Step 1: Turn the wrench clockwise to lower the four leveling feet at the bottom of UPS until all the four wheels at the bottom of the case are suspended and the equipment is fully supported by the leveling feet.

Step 2: Check the level of the case with the leveling instrument. If not, continue to adjust the leveling feet until reaching the level state.

3.2.2 Install Tightening Components

The tightening components are installed for vibration and impact resistance, and can be selectively installed according to the installation environment. The specific installation procedure is as follows:

Step 1: Determine the installation position and mark the positioning on the installation surface according to the hole location size diagram. The size diagram of 80/100/120kVAUPS is same as the diagram of 160/180/200 kVA UPS, take 160/180/200 kVA UPS as an example shown in Fig. 3-4.

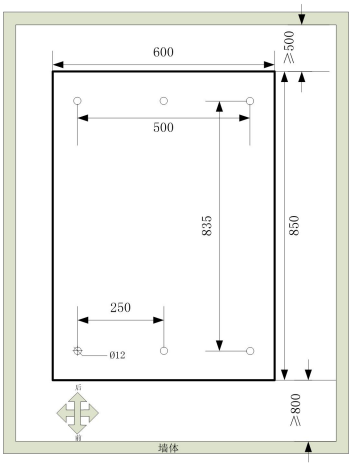

Fig. 3-4 Hole size of 160/180/200 kVA

Step 2: Selectively install expansion bolt holes and expansion bolts according to the site conditions of installation foundation.

Step 3: Handle the UPS to the installation position with the roller.

Step 4: Turn the wrench clockwise to lower the four leveling feet at the bottom of UPS until all the four wheel at the bottom of the case are suspended and the equipment is fully supported by the leveling feet.

Step 5: Secure the tightening components to the cabinet with 6*M12 bolts.

Step 6: Adjust the cabinet to make the expansion bolts aligned with the holes below

Step 7: Fasten the two tightening components in the front and rear of the cabinet to the ground with six M12×60 expansion bolts.

3.2.3 Install Batteries

Please refer to the battery installation instructions shipped with the battery for methods.

After the battery is installed, check the voltage of a single battery, normal range: 10.5 V -13.5 V; Check the voltage difference between single cell in a series battery string, generally no more than 5%. If not, charge or replace the battery.

3.2.4 Connect Power Cables

Step 1: Remove the cover plate of the power distribution unit (80/100/120kVAUPS uses bottom cable entry system, its cover plate is on the bottom. 160/180/200 kVA UPS uses top cable entry and bottom cable entry system), as shown in following figures.

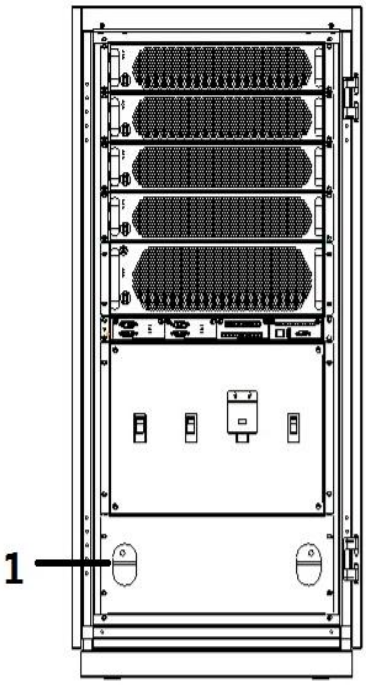

1 Bottom cover plate

Fig.3-5 Removing the bottom cover plate of the power distribution unit (80/100/120kVA)

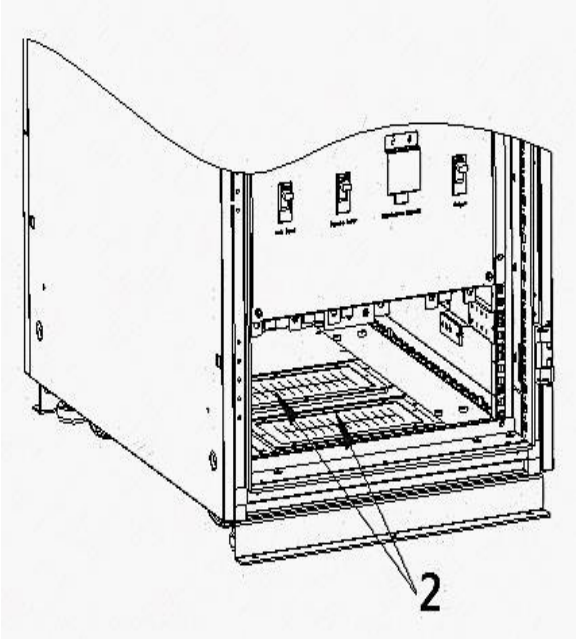

2 Bottom inlet and outlet

Fig.3-6 Inlet and outlet of the power distribution unit (80/100/120kVA)

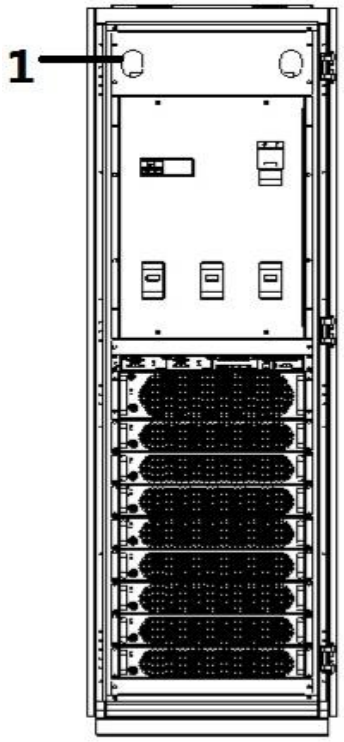

1 Top cover plate

Fig.3-7 Removing the top cover plate of the power distribution unit (160/180/200kVA)

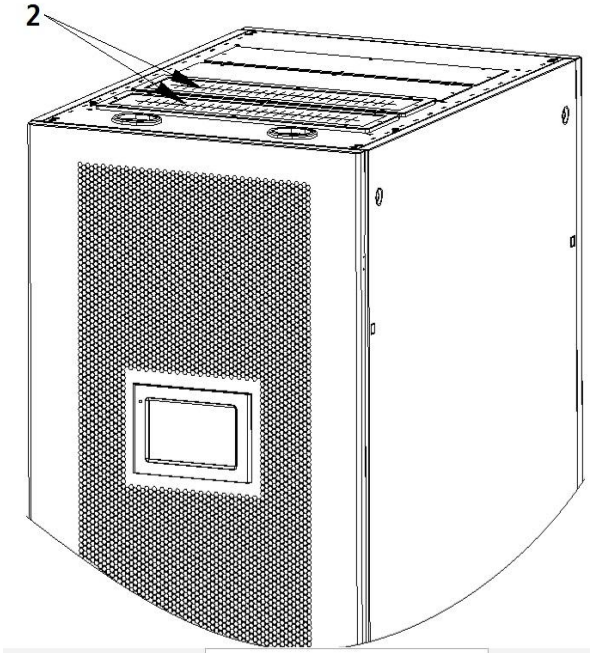

2 Top inlet and outlet

Fig.3-8 Inlet and outlet of the power distribution unit(160/180/200 kVA)

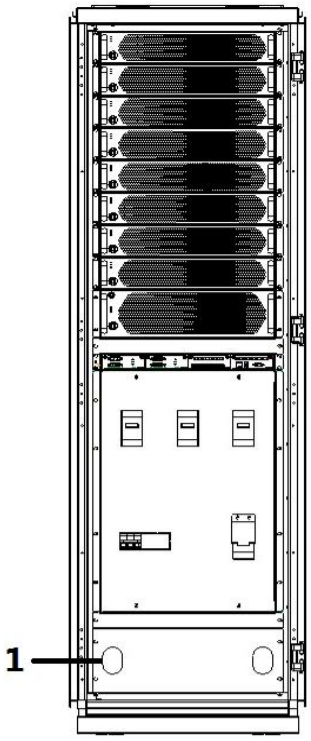

1 Bottom cover plate

Fig.3-9 Removing the bottom cover plate of the power distribution unit (160/180/200kVA)

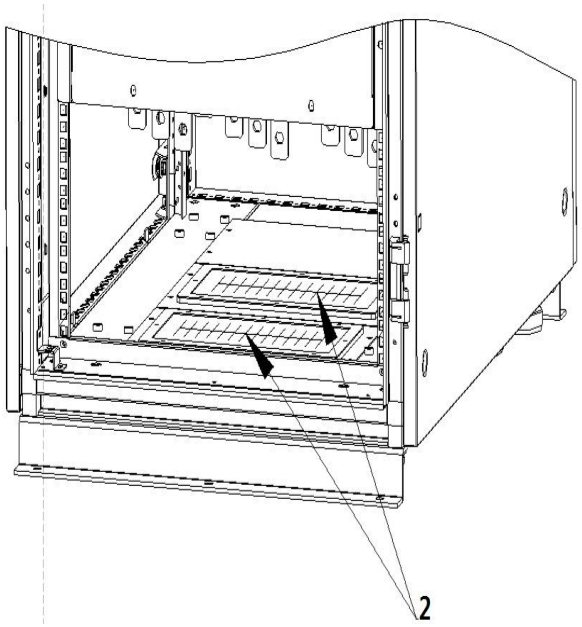

2 Bottom inlet and outlet

Fig.3-10 Inlet and outlet of the power distribution unit(160/180/200kVA)

Step 2: Connect the power cables.

1. Connect battery cables

	CAUTION
⚠	• Battery voltage can be fatal. Please observe safety instruction during connecting cables. • Select total number of batteries from 30 to 46 (even number), and the number of positive and negative battery strings must be consistent. • Positive and negative battery strings must be equipped with a 3-channel battery breaker with limited current protection. • During wiring, ensure that the polarity of the cable connecting the battery terminal to the battery breaker and the battery breaker to the UPS terminal is correct.

The reference connection mode of the battery strings is shown in Fig. 3-11, where the N line of the battery is the reference potential leading from the connection point in the middle of positive and negative battery strings.

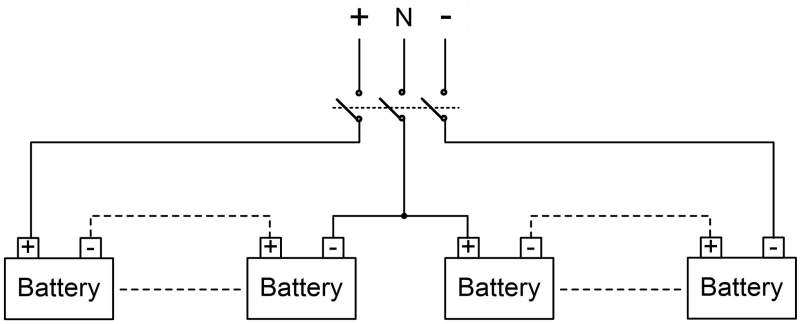

Fig. 3-11 Wiring diagram of battery strings

Connect the battery cable of the battery string to the +, N and - of the battery distribution terminal, as shown in Fig. 3-12 and Fig. 3-13.

(**Note**：The N line bar can be connected to N lines of battery, mains input, bypass input and output at the same time)

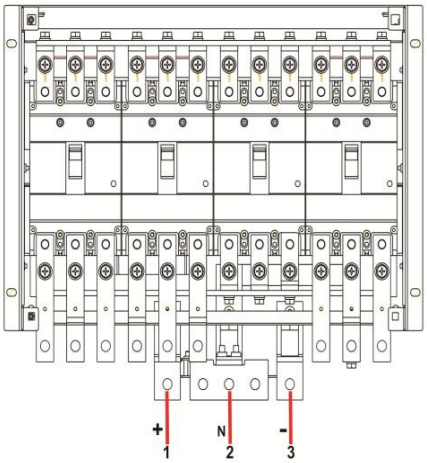

Fig.3-12 Connection of battery cable
（80/100/120kVA）

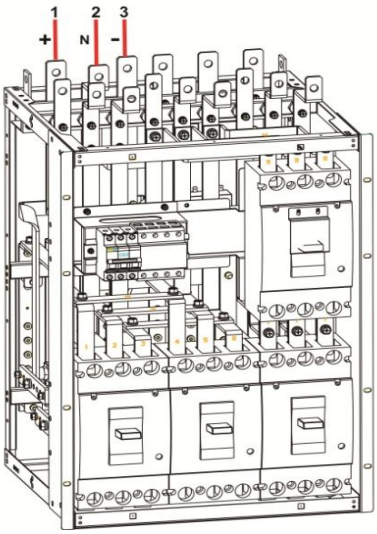

Fig.3-13 Connection of battery cable
（160/180/200kVA）

1	Battery input +	2	Battery input N	3	Battery input -

2、Connect the AC input cable

- The mains and bypass are of the same power supply

Step 1: The factory default of the UPS is that the mains input and the bypass input are the same source, and the copper bar is already installed on the UPS.

Step 2: Connect the AC input cables to the main input power distribution terminals 1L1, 1L2, 1L3, and N in sequence, as shown in Figure 3-14 and Figure 3-15. Before powering on, please use a multimeter to confirm that there is no short circuit between each phase of the terminals.

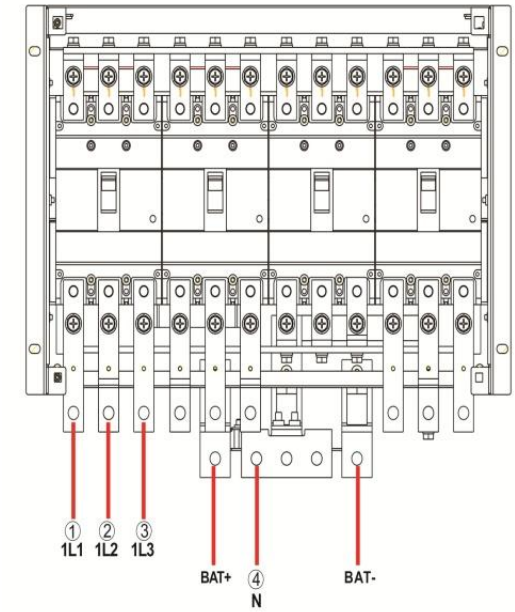

Fig.3-14 Connect the AC input cable
（80/100/120kVA）

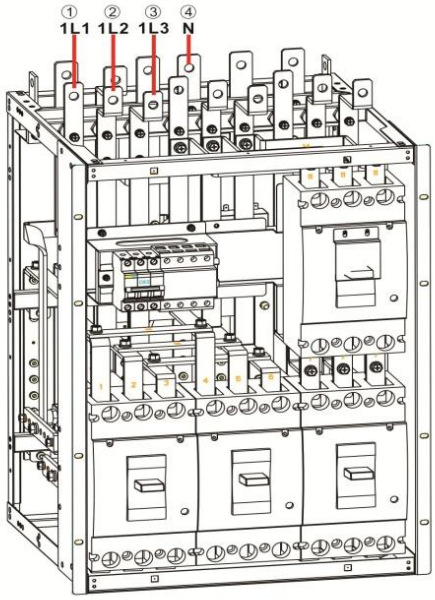

Fig.3-15 Connect the AC input cable
（160/180/200kVA）

1	Input 1L1	2	Input 1L2	3	Input 1L3
4	Input 1N				

- The mains and bypass are of different power supply

Step 1: Remove the connected copper bar of the UPS that the mains and the bypass are the same source.

There are two design types for 80/100/120kVA UPS that the mains input and the bypass input are the same source. The old version design is equipped with connected copper bar 10 in the power distribution module (as shown in Figure 3-16-1), when removing the connecting copper bar, first remove the left side door, and then remove the left copper bar 10 connecting the mains and the bypass. The new version design of the connected copper bar that the mains and the bypass are the same source is shown in Figure 3-16-2, when removing the connecting copper bar, just remove the front panel of the power distribution module, and then remove the copper bars 10 and 15. After being removed, a multimeter is needed to check whether the mains and the bypass are disconnected, and the power could be turned on after confirmation.

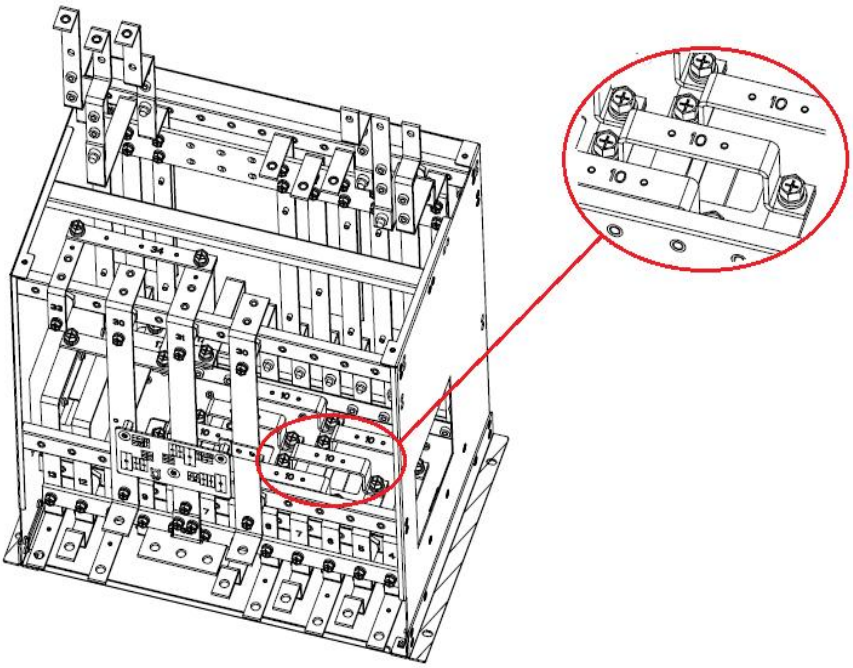

Figure 3-16-1 The connected copper bar that the mains and the bypass are the same source (No. 10 copper bar) of the 80/100/120kVA rack in the old version

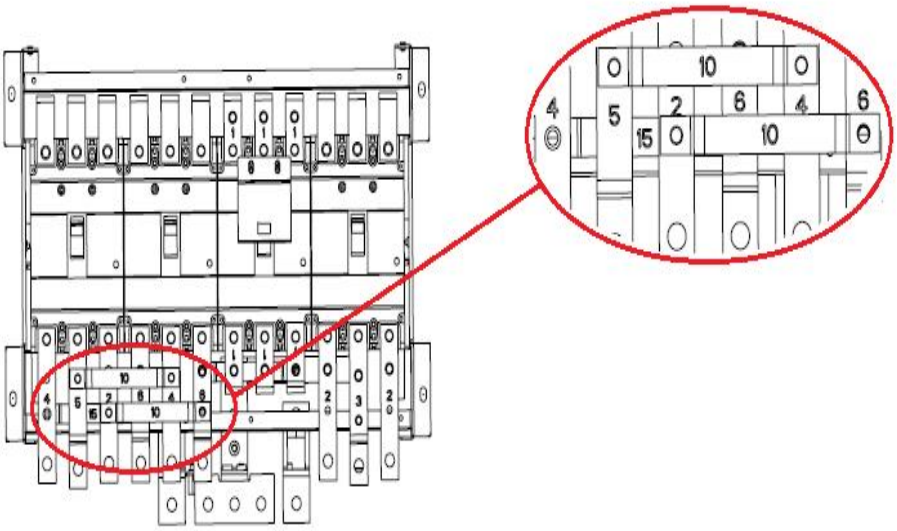

Figure 3-16-2 The connected copper bar that the mains and the bypass are the same source (No. 10 and 15 copper bar) of the 80/100/120kVA rack in the new version

The connected copper bar that the mains and the bypass are the same source of the 160/180/200kVA UPS is shown in Figure 3-17, which is connected by the No.14 copper bar. If it is required that the mains and the bypass are not the same source, remove the front panel of the power distribution module, and then remove the copper bars No.14. After being removed, a multimeter is needed to check whether the mains and the bypass are disconnected, and the power could be turned on after confirmation.

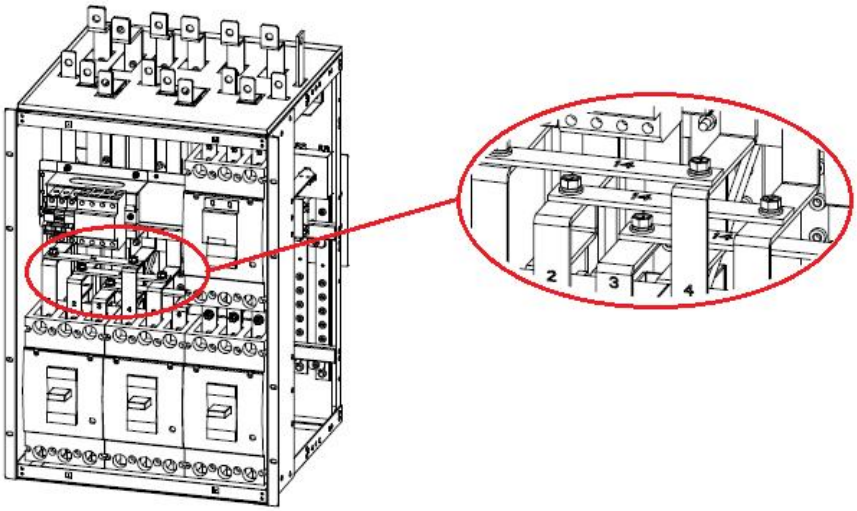

Figure 3-17 The copper bar connecting the mains and the bypass (160/180/200kVA No. 14 copper bar)

Step 2: Connect the main input cables to the main distribution terminals 1L1, 1L2, 1L3, and 1N in sequence.

Step 3: Connect the bypass input cables to the bypass power distribution terminals 2L1, 2L2, 2L3, and 2N in sequence, as shown in Figures 3-18 and 3-19. Before powering on, please use a multimeter to confirm that there is no short circuit between each phase of the terminals.

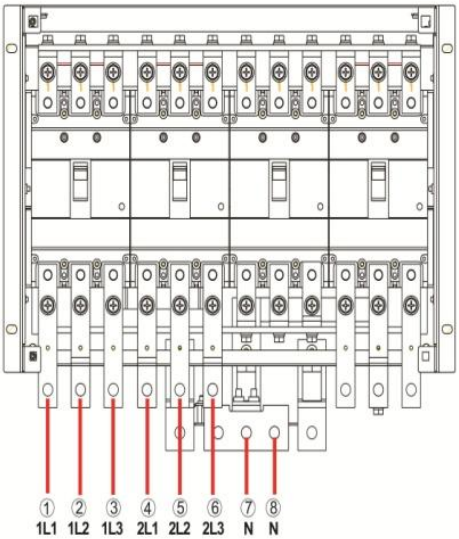

Fig.3-18 Connect the AC input cable
（80/100/120kVA）

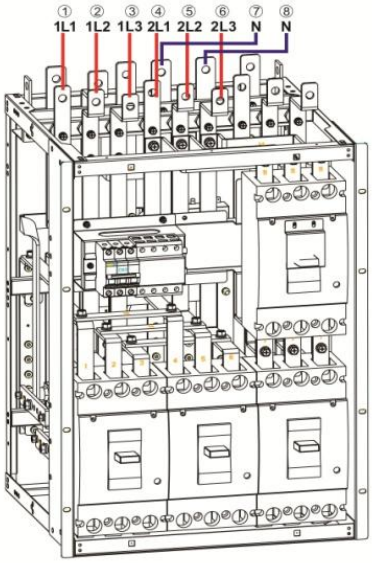

Fig.3-19 Connect the AC input cable
（160/180/200kVA）

1	Main input 1L1	2	Main input 1L2	3	Main input 1L3
4	Bypass input 2L1	4	Bypass input 2L2	6	Bypass input 2L3
7	Main input 1N	8	Bypass input 2N		

3.Connect AC output cables

Connect the output cables successively to the output distribution terminals 3L1, 3L2, 3L3 and N, as shown in Fig. 3-20 and Fig. 3-21.

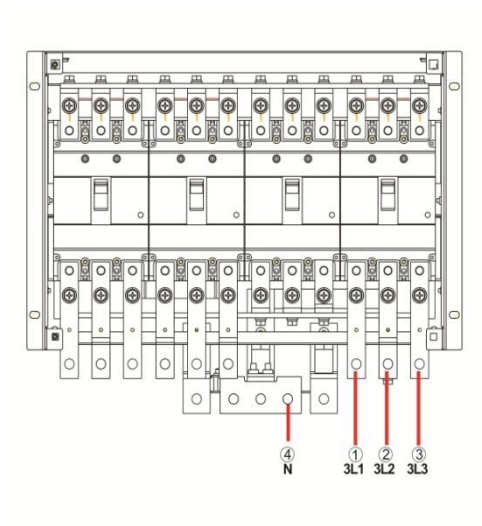

Fig.3-20 Connect AC output cable
（80/100/120kVA）

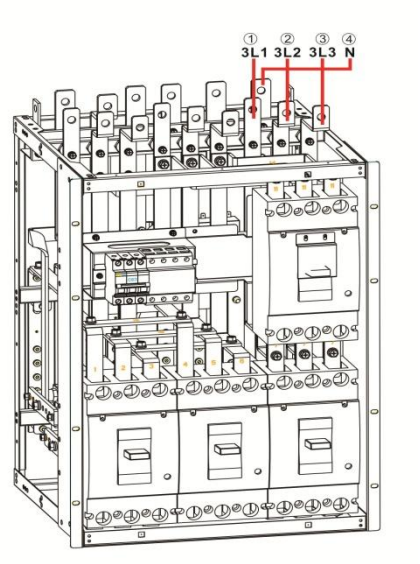

Fig.3-21 Connect AC output cable
（160/180/200kVA）

1	Output 3L1	2	Output 3L2	3	Output 3L3
4	Output N				

3.2.5 Connect the Ground Cable

Connect the ground cable to the UPS, as shown in Fig. 3-22 and Fig. 3-23. Additional M8 grounding ports are reserved on the left and right sides of the distribution cabinet.

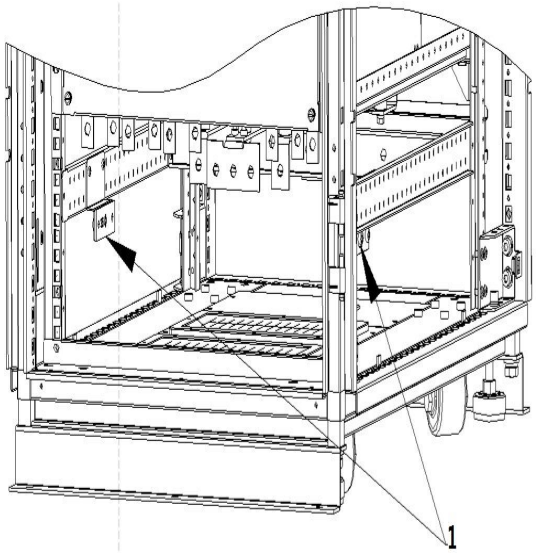

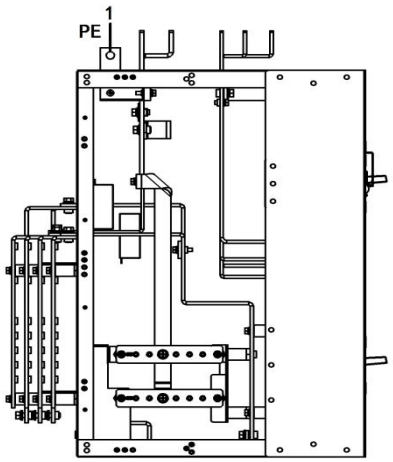

1 PE copper bar wiring

Fig.3-22 Connect ground cable
(80/100/120kVA)

Fig.3-23 Connect ground cable
(160/180/200kVA)

3.2.6 Communication Signal Interface

The communication signal structure of the 20kVA -200 kVA series UPS system is mainly concentrated in the control module, which includes the system control board, dry contact board and monitoring board. The interfaces of control module are shown in the Fig 3-24.

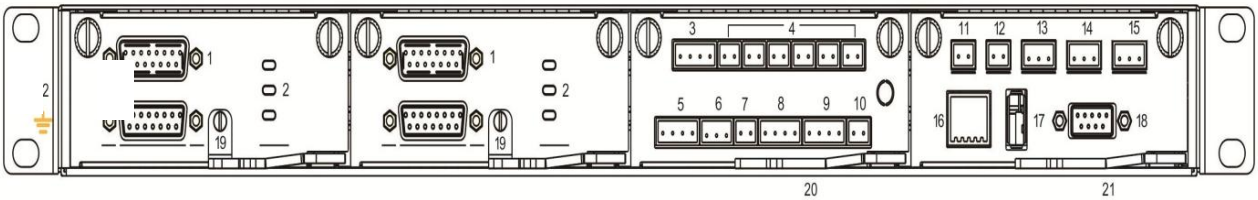

Fig. 3-24 Interfaces of control module

1	LBS connection port/rack parallel port	2	LED indicator	3	Input dry contacts
4	Output dry contacts	5	Battery ground fault (BTG) interface/generator (GEN) interface	6	Generator (GEN) port
7	Battery circuit breaker （BCB）port	8	EPO port	9	Switch state port of distribution cabinet
10	SPD port	11	Ambient temp port	12	Battery temperature compensation port
13	CAN port	14	R485 port 1	15	R485 port 2
16	Ethernet port	17	USB port	18	LCD port
19	lug-in switch of system control boards	20	Plug-in switch of dry contacts board	21	Plug-in switch of monitoring board

Parallel operation interface and LBS interface

When parallel operation is needed, parallel operation control cable shall be used to connect the parallel connection interface of each single UPS in a circular way, and no connection is needed for the single UPS. LBS is used in the dual bus system to process the communication information of two UPS systems. Specific functions are shown in Table 3-6.

Table 3-6 Function of parallel operation interface and LBS interface

Panel silk-screening	**Description**
PARALLEL PORT	It indicates parallel signal interface between hosts. When multiple UPSs are connected in parallel, the parallel operation interface of each UPS shall be annular connected with parallel operation control cables. N parallel operation control cables shall be used to connect N UPSs, so as to ensure that each UPS is connected with at least two parallel operation control cables and improve parallel operation reliability.
LBS	LBS is used in the double-bus system to balance the output frequency and phase of each system in the double-bus system to ensure change between two buses.

Dry contact interface

Through the dry contact interface of UPS, it is possible to achieve functions such as monitoring status of the external device, managing the battery system, providing warning signal to the external device and remote emergency shutdown. The dry contact interface of the equipment can be customized. The default is none. User-defined dry contacts and corresponding functions are shown in Table 3-7.

Table 3-7 Function of dry contacts

Dry contacts	Signal description	Status description	Function description
（DRY CONTACT INPUT） DI_1~DI_2	Door contact alarm	The initial state is disconnected. “Disconnect” indicates that the door is closed. “Close” indicates that the door is open.	Detect the state. The UPS will emit an alarm when the door is open.
	waterlogging alarm	The initial state is disconnected. “Disconnect” indicates that there is no water logging. “Close” indicates that there is water logging.	Detect the state. The UPS will emit an alarm when there is water coming in.
（DRY CONTACT OUTPUT） DO_1~DO_6	Critical alarm	It is closed in initial state. Being closed means there is no emergency alarm for the UPS. Being disconnected means there is emergency alarm for the UPS.	Whether there is status information about fault alarms.
	Minor alarm	It is closed in initial state. Being closed means there is no minor alarm for the UPS. Being disconnected means there is minor alarm for the UPS.	Whether there is status information about non-fault alarms.
	Bypass power	It is closed in initial state. Being closed means the UPS is not in the bypass power supply state. Being disconnected means the UPS is in the bypass power supply state.	Whether the UPS is in the state of bypass powered.
	Battery power	It is closed in initial state. Being closed means the UPS is not in the battery power supply state. Being disconnected means the UPS is in the battery power supply state.	Whether the UPS is in the state of battery powered.
	Battery low voltage DOD	It is closed in initial state. Being closed means the battery voltage of the UPS is normal. Being disconnected means low battery voltage.	Whether the UPS is in low battery state.
	Battery low voltage EOD	It is closed in initial state. Being closed means the battery of the UPS works properly. Being disconnected means battery discharge ends.	Whether the battery is at end of discharging.
	Generator control	It is closed in initial state. Being closed means the UPS is not controlled by the generator. Being disconnected means the UPS is controlled by the generator.	Mains input is abnormal. Emit generator starting signal in battery mode.

Dry contacts	Signal description	Status description	Function description
Battery ground fault（BTG）	Battery ground fault	It is disconnected in initial state. Being disconnected means there is no battery ground fault. Being closed means battery ground fault.	Detect the state of battery ground. The UPS will emit an alarm when there is ground fault.
Diesel generator mode（GEN）	D.G. mode	It is disconnected in initial state. Being disconnected means non-D.G.mode. Being closed means D.G.mode.	Detect the working state of the generator. The UPS will increase related adaptability in D.G mode.
Battery breaker state（BCB）	Signal port to detect the BCB status	It is disconnected in initial state. Being disconnected means the battery breaker is disconnected. Being closed means the battery breaker is closed.	Detect the state. The UPS will emit an alarm when the battery breaker is disconnected.
battery circuit breaker trip（BCB）	Driving signal of BCB trip	It is closed in initial state. Being closed means the battery breaker is closed. Being disconnected means the battery breaker trips.	Trip driving signal. It indicates that driving the battery breaker trips when it is disconnected.
Output switch state of power distribution cabinet	Detecting the output switch state of the distribution cabinet	It is closed in initial state. Being closed means the output switch of the power distribution cabinet is closed. Being disconnected means the output switch of the distribution cabinet is disconnected.	Detect the state. The UPS will emit an alarm when the output switch of the power distribution cabinet is disconnected.
Maintenance switch state of power distribution cabinet	Detecting the maintenance switch state of the distribution cabinet	It is disconnected in initial state. Being disconnected means the maintenance switch of the distribution cabinet is disconnected. Being closed means the maintenance switch of the distribution cabinet is closed.	Detect the state. The UPS is switched to bypass and emit an alarm when the maintenance switch of the distribution cabinet is closed.
Bypass switch state of power distribution cabinet	Detecting the bypass switch state of the distribution cabinet	It is closed in initial state. Being closed means the bypass switch of the distribution cabinet is closed. Being disconnected means the bypass switch of the distribution cabinet is disconnected.	Detect the state. The UPS will emit an alarm when the bypass switch of the power distribution cabinet is disconnected.
SPD state	Detecting the SPD state	It is closed in initial state. Being closed means the AC SPD is normal. Being disconnected means the SPD fails.	Detect the state. The UPS will emit an alarm when the SPD fails.
（EPO）	Emergency power off NC signal port	It is closed in initial state. Disconnect the EPO to trigger an emergency shutdown.	Detect the state of emergency power off.
	Emergency power off NO signal port	It is disconnected in initial state. Close the EPO to trigger an emergency shutdown.	

Note

- DI_1 ~ DI_2 represent dry contact input interface 1 ~2, DO_1 ~ DO_6 represent the dry contact output interface 1 ~ 6.
- NO represents normally open end, and NC represents the normally close end.
- When a dry contact signal cable of external equipment is connected to the dry contact interface of UPS, it is required to ensure the full corresponding of the dry contacts at two ends of the cable.
- NO signal end is recommended for connection of remote EPO to avoid UPS failure resulting from the failure of connecting cable. In order to avoid misoperation, the emergency stop button shall be protected by an anti-misoperation cover plate, and the connecting cable shall be protected by the pipe.

Communication signal interface

Through the communication signal interface, connection and communication with external devices can be realized, so that UPS can be monitored and managed, as well as complete other functional interactions. The functions of the communication signal interface are shown in Table 3-8.

Table 3-8 Functions of the communication signal interface

Signal interface	Panel silk-screen	Function description
RS485 1 port	RS485_1	Connect to the local host via RS485 for local monitoring communication.
Battery monitor port / BMS port of lithium-ion battery	RS485_2	Connect the battery monitor via RS485 to detect the state of each single battery or connect lithium-ion batteries via RS484 to manage the communication of lithium-ion batteries.
	CAN	Connect the battery monitor via CAN to detect the state of each single battery or connect lithium-ion batteries via CAN to manage the communication of lithium-ion batteries.
Ethernet port	ETH	Connect the local host via network cables to debug and configure the UPS.
Ambient temperature sensor port	ENV_TEMP	Connect the ambient temperature sensor via the phoenix interface to detect the ambient temperature.
Battery temperature sensor port	B_TEMP	Connect the battery temperature sensor via the phoenix interface to detect the battery temperature.
USB port	USB	Connect USB devices (USB flash disk, etc.) via the USB to upload the program for online upgrade, or to download history records.
Monitoring display unit interface	MDU	Connect the monitoring display unit via DB9 port to control the UPS and display its status.

The connection schematic diagram of 485 and CAN communication interface：

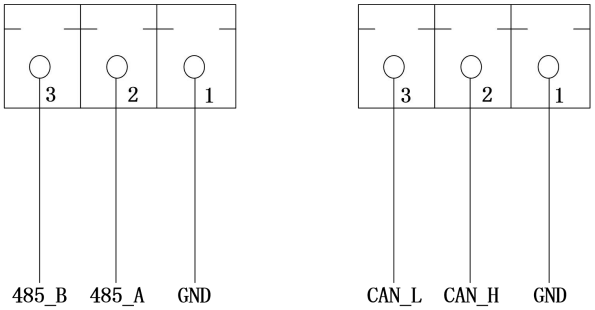

Figure 3-25 Connection schematic diagram of communication interface

Connect Temperature Compensation

One end of the network cable is connected to the "BAT_TEMP" interface, and the other end is connected to the "temperature Compensation Sampling device", which is installed inside the battery cabinet in actual use. The range can be set as 0~ 6.0mv /℃-cell, and the default is 3.3MV /℃-cell.

The temperature reference value of temperature compensation is 25℃.

The system can automatically adjust the floating charge voltage according to the battery temperature.

Correction formula for temperature compensation of float charge voltage：V=V0-(T-25)ρ，among which：

－V：Floating charge voltage of single cell after temperature compensation

－V0：Single cell float charging voltage at 25℃（According to the value provided by each manufacturer, the default value：2.25V/cell）

－T：Battery ambient temperature

－ρ：Temperature compensation coefficient of float charge voltage（According to the value provided by each manufacturer, the default value：3.3mV/cell・℃）

－ Low temperature alarm point, high temperature alarm point

Monitor the battery temperature in time. When the battery overtemperature is detected, UPS alarm and the charging current limit value is reduced to 0.03CA. When the battery overtemperature protection is detected (high temperature alarm +3℃), UPS alarm and stop charging the battery.

Optional intelligent functional modules

Optional intelligent modules: 4G module, Wi-Fi module .

The intelligent module is installed in the monitoring module of the UPS. The installation steps are as follows.

Step 1: Remove the dry contact board from the monitoring module in standby mode.

Step 2: Insert the required intelligent module on the dry contact board.

Step 3: Then insert the dry contacts into the monitoring module to complete the installation.

- **4G card** allows UPS to connect the Internet through 4G data (local SIM card is required), and the server for data communication, and UPS may be monitored online through computer or mobile phone. Please refer to supporting operation instruction for details
- **Wi-Fi card** allows UPS to connect the Internet through Wi-Fi and the server for data communication, and UPS may be monitored online through computer or mobile phone. Please refer to supporting operation instruction for details

3.2.7 Modules with Hot-swap

Modules of 20 kVA -200 kVA series UPS can be hot-swapped. The UPS can monitor the connection status of modules in real time and automatically open or close the module according to its connection status.

The sequence from rack low to high is power module 1-8, as shown in Figure 3.25. In the case of non-full configuration, the user needs to set the number of "in-rack power modules" in the system "advanced parameters" to the actual number of use. Power modules can be inserted into any power module rack slot, and the system will automatically identify the module.

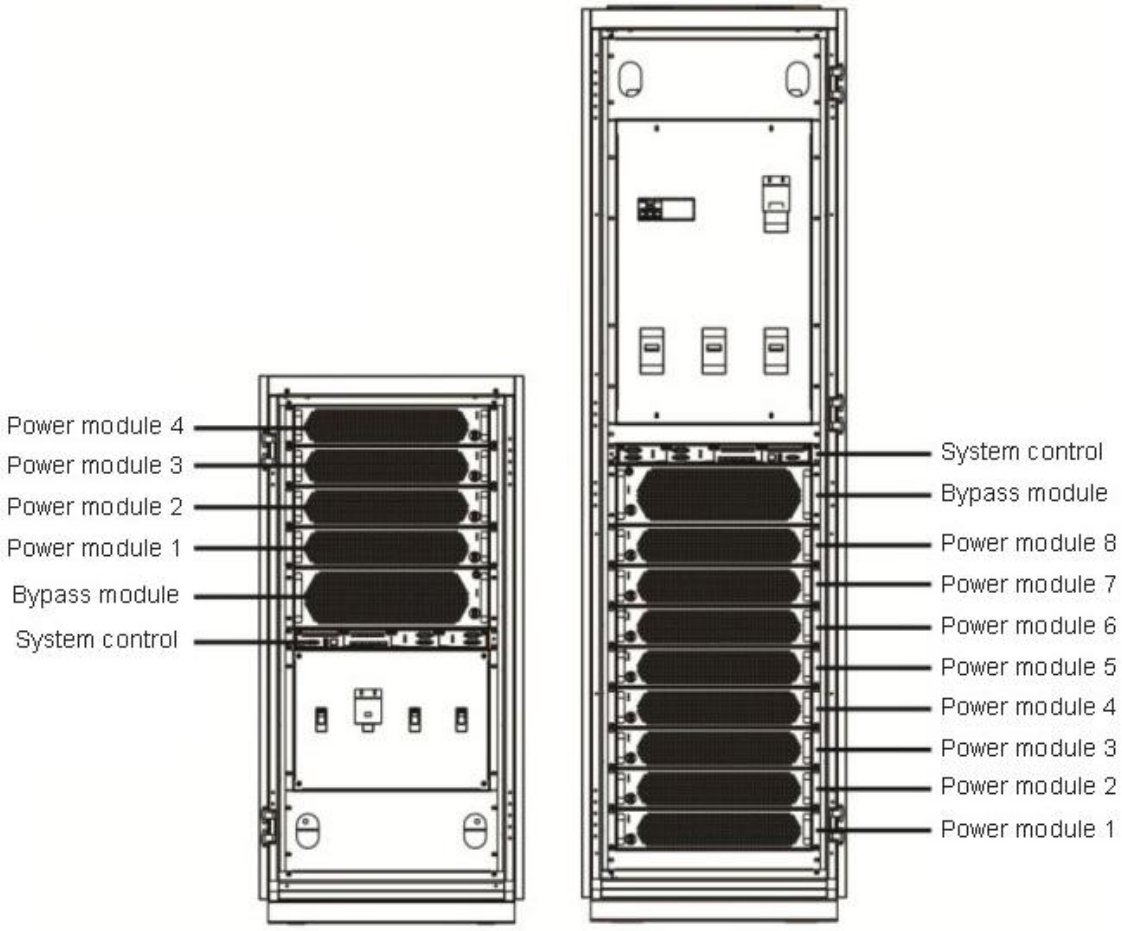

Fig. 3-25 Order of moduels

Modules plug-in

1. Place the UPS module into the corresponding free slot in the cabinet, push the module flat into the cabinet along the slot until the module is fully inserted into the cabinet.
2. Tighten the screw positioning holes on the left and right sides of the module with special crown screws. Turn the ready switch of the module counterclockwise with the direction upward.
3. When UPS detects the new module, if other modules in the rack are not in inverter output state, click "Start up" button in the panel and the module will start up. If other modules in the system are already in the inverter output state, the module inserted later does not need to click "start up", and the module will be automatically started to the inverter output state.

Modules pull-out

1. Turn the ready switch of the module clockwise (as shown in Fig. 2-13), turn to the right, and the module stops running.
2. After the module fan decelerates, unscrew the screws on both sides of the UPS module panel and pull out the module.

Refer to Fig. 3-26 for module safety operation.

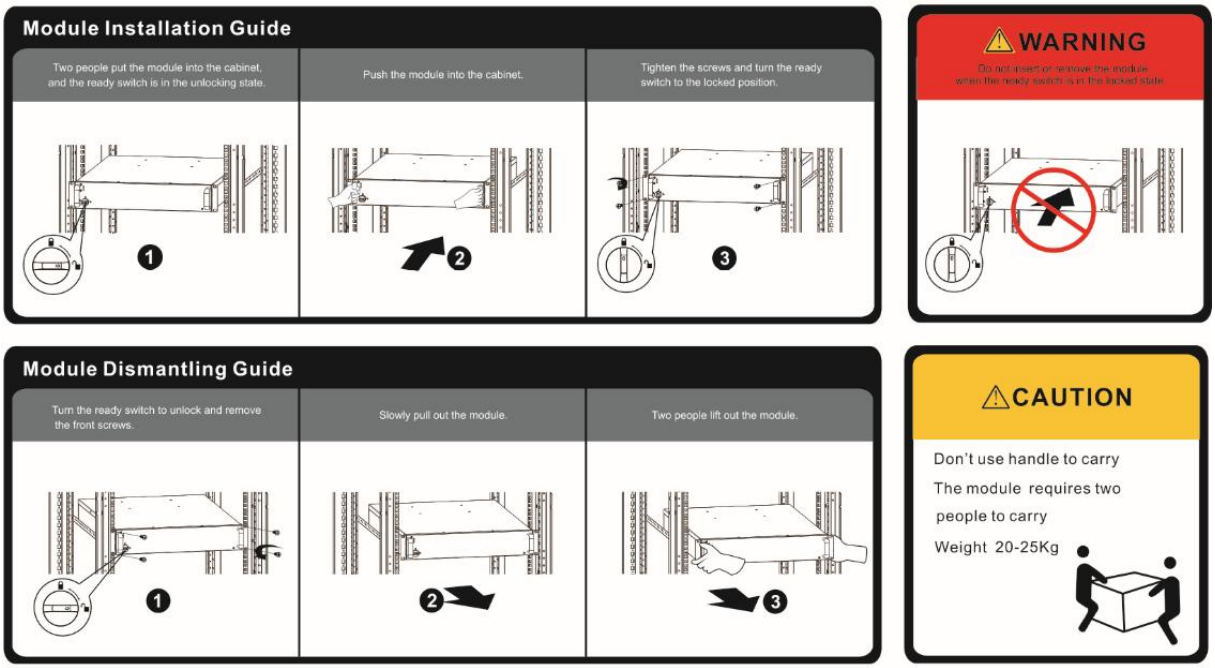

Fig. 3-26 Safe operation in the process of plug for modules

	CAUTION
	• When the module is inserted into the UPS, it should be pushed slowly until the module is fully inserted into the cabinet. Note that the terminals between them must be tightly inserted, and do not force too much, otherwise it will damage the terminal pins. • After the power module is pulled out, it must stand for 30 seconds before it is allowed to push back into the cabinet, otherwise it may cause the risk of system failure.

3.3 Installation of Parallel UPS System

This series UPS can be paralleled and scalable with a maximum of 2 pcs connected in parallel and expand to 400 kVA.

3.3.1 Connect Power Cables

Wiring procedures:

As shown in the figure, respectively connect the mains power input, bypass input, output and battery of the UPS to be connected in parallel, and then connect the mains power, the bypass, the battery and the load respectively.

Step 1: Properly install the AC input cables and the battery cables of each UPS in the parallel system as shown in 3.2.4.

Step 2: Ground the single UPS of each parallel system separately. See 3.2.5 for the grounding method.

Step 3: Connect the mains power input, bypass input, output and battery of UPS to be connected in parallel, and then connect the mains power, the bypass, the battery and the load respectively.

The power wiring diagram of the parallel system is shown in Fig. 3-25.

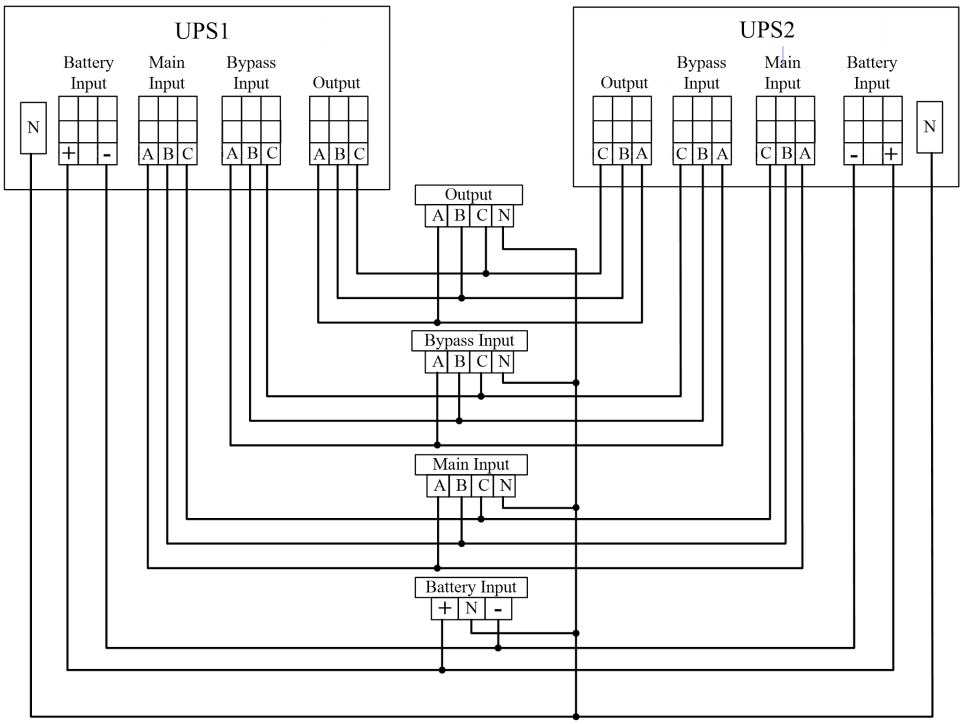

Fig. 3-26 Schematic diagram for power wiring diagram of parallel system

Note

- If the parallel system shares the battery string, it is required to set to battery strings sharing in
- the system.
- During wiring, connect the power cables with the distribution terminals of UPS one by one according to the screen-printed corresponding relationship.
- The length and specification of each power cable should be as same as possible, including bypass input cable and UPS output cable, so as to achieve even current in bypass mode.

3.3.2 Connect Control Cables

Connect parallel control cables

As shown below, connect in series the parallel ports in the communication interfaces of paralleled UPSs with provided parallel cables. Maximum two units can be connected in parallel for this series UPS.

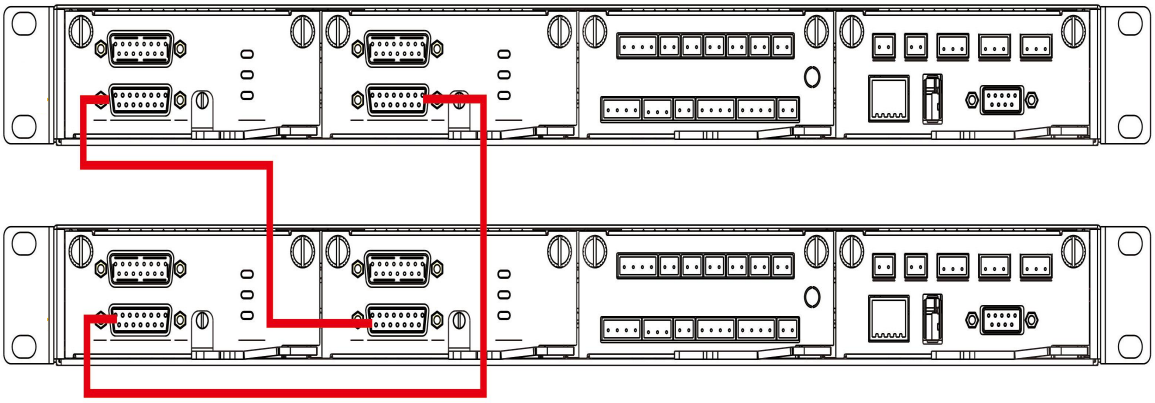

Fig. 3-27 Parallel cable connection

Connect other control cables

Connect the control cables of single UPS in the parallel system according to "3.2.6 communication signal interface".

3.4 Installation Inspection

The inspection items and acceptance criteria are shown in Table 3-9.

Table 3-9 Inspection items and acceptance criteria

No.	Inspection items	Acceptance criteria
01	Inspect whether the system configuration is consistent with the delivery.	The model number of the field system and the number of units shall be consistent with the those provided in contract .
02	Inspect whether future system cabling is considered during wiring	The cabling is reasonable and conforms to the construction requirements.
03	Inspect whether the input cable, the output cable and the battery connection cable are connected securely.	All cable connections shall be not loose, and during fastening screws, make sure that the spring pads are pressed flat to prevent falling off or safety accidents, and ensure that there are no open circuit and hidden trouble points in the connection.
04	If the equipment is remotely managed, check that the associated serial port (which supports security mechanisms) is connected correctly.	The control cable must be corrected properly and tightened.
05	Inspect whether the cable mark is clear and accurate.	Both ends of the cable should be marked, and the label should be concise and easy to understand.
06	Inspect whether the ground wire of UPS is connected to the ground wire row in the machine room and whether the ground wire connection is reliable.	It is required to connect securely the grounding bar in the machine room.
07	Check the connection of each cable.	Check the connection of the circuit against the circuit diagram.
08	Inspect whether the input live wire and zero wire are connected inversely	The live wire and the zero wire must be correct properly.
09	For single UPS, inspect whether the phase sequence of the input live wire is correct; for parallel operation, inspect whether the phase sequence of main and bypass input and output live wires of each UPS is consistent .	For single UPS, the phase sequence of the live wire of UPS input is correct; for parallel operation, the phase sequence of the live wires of UPS main and bypass circuit input and output is consistent.
10	Check the operating environment.	Remove electrical dust and other sundries inside and outside the cabinet.
11	Inspect whether the copper bars are short-circuited.	A multimeter shows the open circuit between the copper bars.

4 UPS Display Interface

4.1 Monitoring Display Unit

The monitoring display unit of UPS is located on the front panel of the UPS. Through the operation monitoring display unit, the operation control, parameter setting, operation status view, alarm view and other functions of UPS can be realized.

4.1.1 Display Panel

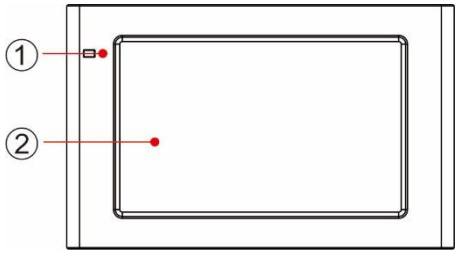

Fig. 4-1 Schematic diagram for panel of monitoring display unit

1	LED indicator light	2	LCD touch screen

4.1.2 LCD and Indicator Lights

The monitoring display unit can display various operation information and alarm information of UPS in real time through LCD, and parameters of UPS can be set and managed through LCD. The status of indicator lights for monitoring display unit is shown in Table 4-1.

Table 4-1 Status of indicator lights

Indicator light	Color	Status	Description
Indicator light	Red	Lit	UPS failed
	Red	Flickered	UPS alarming
	Green	Lit	Power supply mode (mains mode, bypass mode, ECO mode, etc.)
	No	Gone out	Not started or in standby status

4.2 Display Interface

4.2.1 Overview

Menu structure

The menu structure of the monitoring display interface is shown in Fig. 4-2.

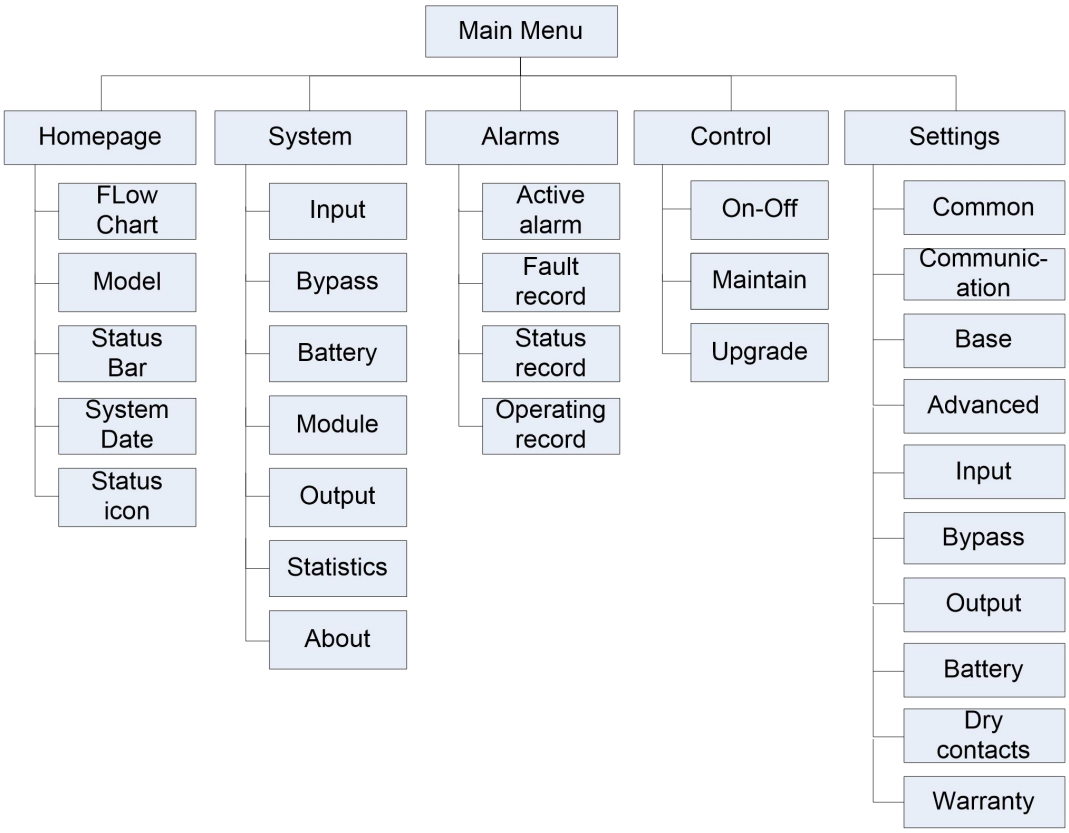

Fig. 4-2 Menu

Starting for the first time

Quick Settings can be set when the device is switched on for the first time or the device is switched on again after the factory settings are restored, as shown in Fig. 4-3. Specific quick settings interface includes language settings, display settings, system settings 1 and system settings 2, and you can directly skip the quick settings. Please refer to "**4.2.6 Settings**" for instructions and suggestions on setting items.

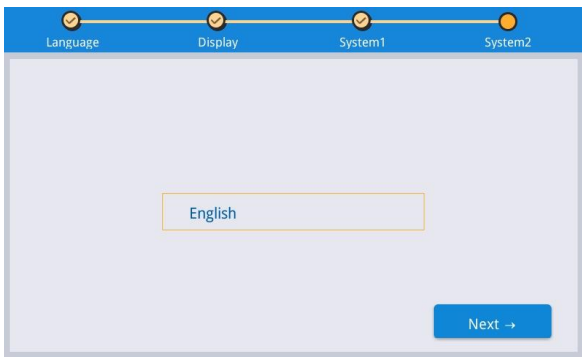

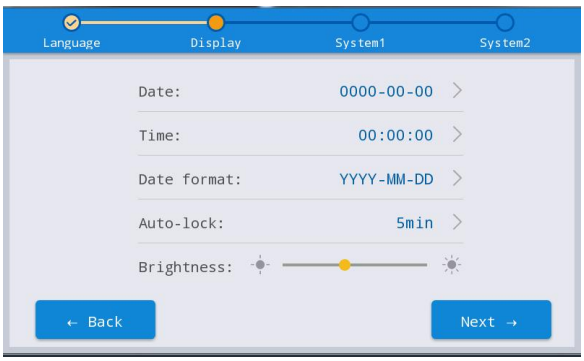

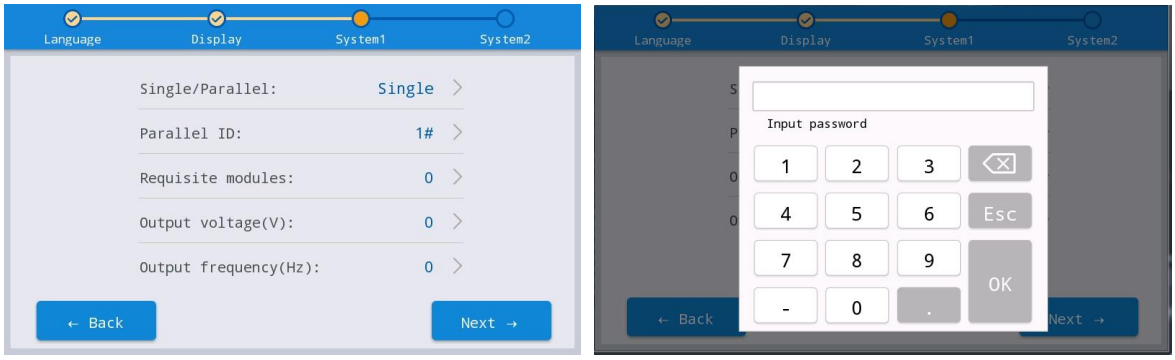

Fig. 4-3 quick settings

The home page is displayed after the quick setting is completed. Advanced password is required to set in the "*System 1*" settings and "*System 2*" settings in the quick settings.

4.2.2 Home Page

The home page is divided into three parts, including main menu, energy flow diagram, status bar. The home page is shown in Fig. 4-4:

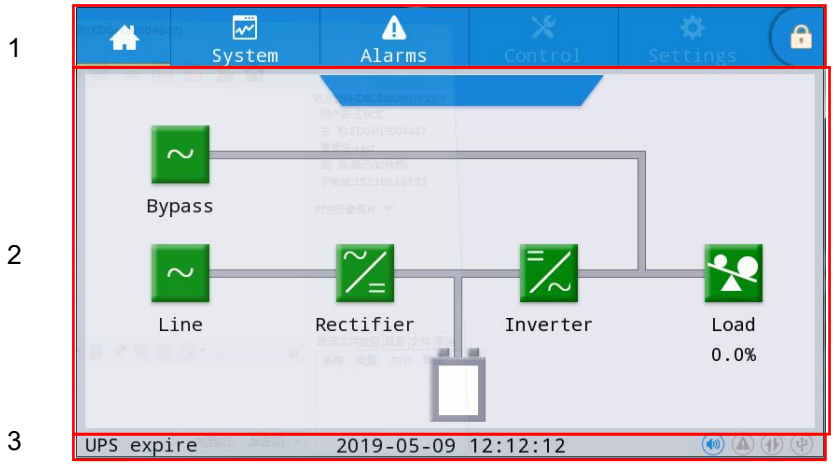

Fig. 4-4 Home page

Table 4-2 Function description of interface area

No.	Area	Function description
1	Main menu	Level 1 menu, including home page, system, alarm, control, settings, password login. The control and the settings are displayed in gray before login by password.
2	Energy flow diagram	Display the energy flow state of the cabinet. Click the corresponding work interface to view the status information.
3	Status bar	Display operation status, system time, buzzer status, alarm status, HMI and monitoring communication status, USB status of the cabinet.

Table 4-3 Description of icons in status bar

Icon	Function description
	Buzzer status, which becomes lit to indicate the buzzer enabled, and off to indicate the buzzer disabled
	Alarm status, which becomes lit to indicate an alarm, and off to indicate no alarm
	HMI communication status which becomes lit to indicate normal communication between HMI and monitoring module, and off to indicate abnormal communication between HMI and monitoring module
	USB connection status, which becomes lit to indicate normal connection of USB device, and off to indicate no connection or abnormal connection of USB device
	Password login/logout key. After clicking, enter user password or advanced password by the keyboard. The screen will be locked automatically.

Table 4-4 Description of password permissions

Password permissions	Default	Function description
User password	123456	Unlock On and OFF control right and the right of common settings and communication settings. It can be changed in "settings - common settings - user password".
Advanced password	Not opened	Unlock all control and setting rights. It can be used by qualified electricians only.

4.2.3 System

In the "*System*" information interface, the "*Input* ", "*Bypass* ", "*Battery* ", "*Module*", "*Output*", "*Statistics*" and "*About* " information of the system can be inquired in the secondary menu at the left side.

Input

The menu interface of the mains input is shown in Fig. 4-5, and displays information on three phases ABC from left to right. The interface description is shown in Table 4-5.

Fig. 4-5 Input interface

Table 4-5 Description of input interface

Display item	Description
Voltage (V)	Mains input phase voltage
Current (A)	Mains input phase current
Frequency (Hz)	Mains input frequency

Bypass

The menu interface of the bypass input is shown in Fig. 4-6, and the interface description is shown in Table 4-6.

Fig. 4-6 Bypass interface

Table 4-6 Description of bypass interface

Display item	Description
Voltage (V)	Bypass input phase voltage
Current (A)	Bypass input phase current
Frequency (Hz)	Bypass input frequency

Battery

The system battery information is shown in Fig. 4-7, and the interface description is shown in Table 4-7.

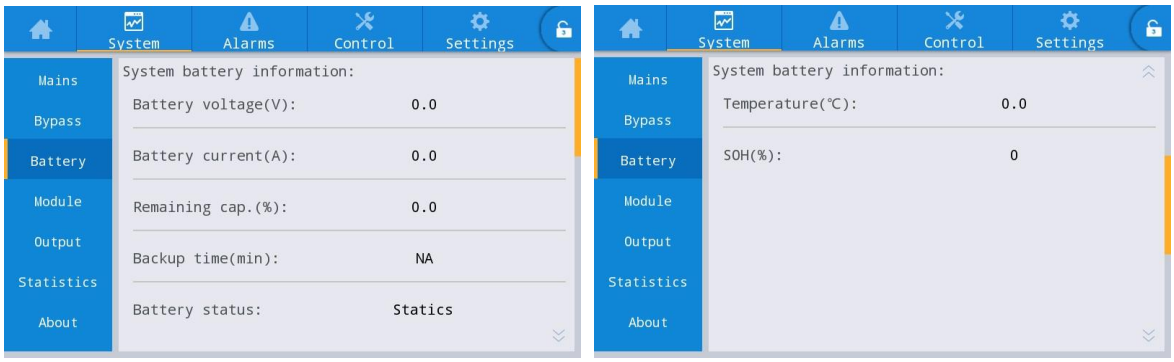

Fig. 4-7 The system battery information

Table 4-7 The interface description

ITEM	DESCRIPTION
Battery voltage(V)	Battery string voltage.
Battery current(A)	Battery string current.
Remaining cap.(%)	The percentage of the battery's current remaining capacity.
Backup time(min)	The estimated discharge time of the battery under the current load condition.
Battery status	The current status of the battery includes: unconnected, static, charge, discharge, equalizing charge, floating charge, and sleep. Lithium batteries have no floating charge status, and the "sleep" mode is enabled by default in the charger settings.
Temperature(℃)	Current operating temperature of lead-acid battery (optional battery temperature sensor is required, and "NA" is displayed when not connected)
SOH(%)	The percentage of battery health status, that is, battery life.

The following is the exclusive information display of lithium battery (including system battery information, battery string n information, battery pack information, battery cell information)：

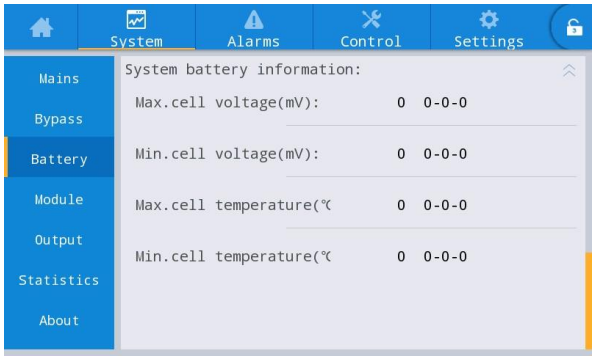

Figure 4-8 The system battery information of lithium battery

Table 4-8 The interface description of lithium battery

ITEM	DESCRIPTION
Max. cell voltage (mV)	Real-time transmission and display of the highest cell voltage of the lithium battery, the battery string number, the pack number in the battery string, and the cell number in the pack. Display example: 3147 1-4-4
Min. cell voltage (mV)	Real-time transmission and display of the lowest cell voltage of the lithium battery, the battery string number, the pack number in the battery string, and the cell number in the pack. Display example: 3027 1-5-8
Max. cell temperature (℃)	Real-time transmission and display of the highest cell temperature of the lithium battery, the battery string number, the pack number in the battery string, and the cell number in the pack. Display example: 30 1-2-4
Min. cell temperature (℃)	Real-time transmission and display of the lowest cell temperature of the lithium battery, the battery string number, the pack number in the battery string, and the cell number in the pack. Display example: 28 1-1-1

At present, UPS supports up to 14 battery pack information display. UPS monitoring and lithium battery system realize real-time communication to obtain online battery cabinets. For online battery cabinets, you can click to enter the lower-level menu lithium battery BMS battery pack to view. For offline battery cabinets, viewing is not supported.

Figure 4-9 Lithium battery string n interface

Table 4-9 Lithium battery string n information description

ITEM	DESCCRIPTION
Battery status	Lithium battery system provides real-time transmission, including: static, charge, discharge, and fault status.
Battery voltage(V)	The battery voltage is provided by the real-time transmission of the lithium battery system. Display example: 480
Battery current(A)	The battery current is provided by the real-time transmission of the lithium battery system. Display example: 30
Max. cell voltage (mV)	Real-time transmission and display of the highest cell voltage of the lithium battery, the battery string number, the pack number in the battery string, and the cell number in the pack. Display example: 3147 1-4-4
Min. cell voltage (mV)	Real-time transmission and display of the lowest cell voltage of the lithium battery, the battery string number, the pack number in the battery string, and the cell number in the pack. Display example: 3027 1-5-8
Max. cell temperature (℃)	Real-time transmission and display of the highest cell temperature of the lithium battery, the battery string number, the pack number in the battery string, and the cell number in the pack. Display example: 30 1-2-4
Min. cell temperature (℃)	Real-time transmission and display of the lowest cell temperature of the lithium battery, the battery string number, the pack number in the battery string, and the cell number in the pack. Display example: 28 1-1-1

Battery pack n information (cell information inside the battery pack)

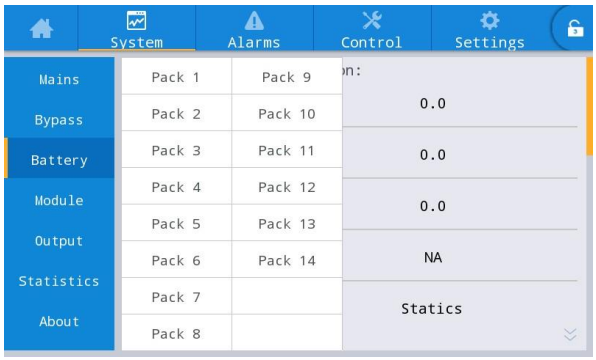

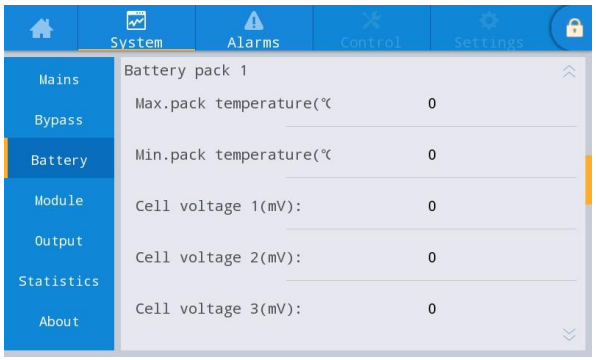

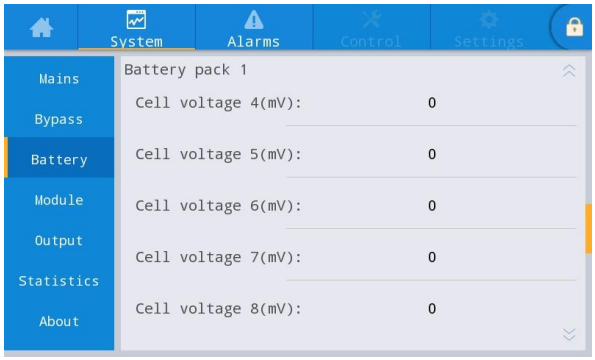

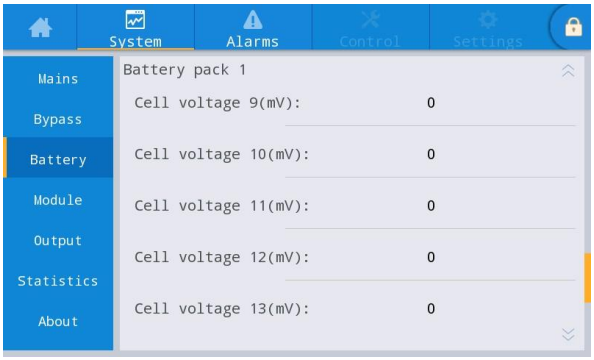

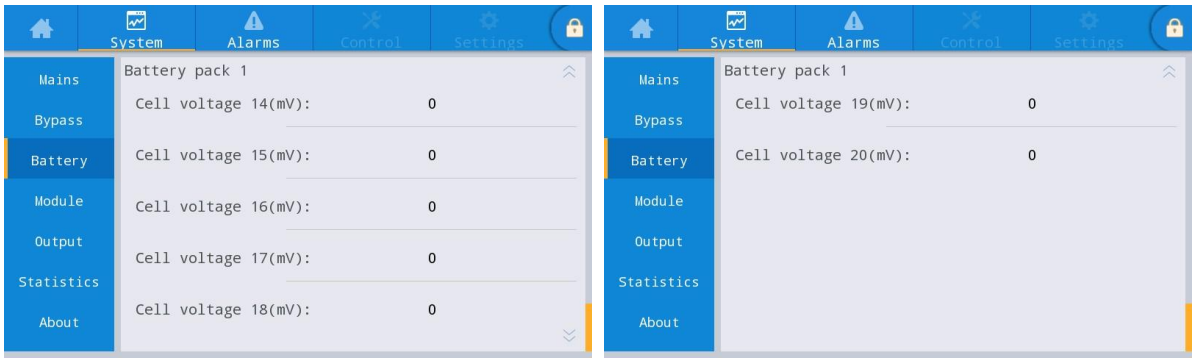

Figure 4-10 Battery pack n interface

Table 4-10 Battery pack n information description

ITEM	DESCRIPTION
Max. pack temperature (℃)	Real-time data transmission of lithium battery, display example：Ct MAX(℃)：25
Min. pack temperature (℃)	Real-time data transmission of lithium battery, display example：Ct Min(℃)：24
Cell voltage 1(mV)	Real-time data transmission of lithium battery, display example：CV 1（mV）:3338
Cell voltage 2(mV)	Real-time data transmission of lithium battery, display example：CV 2（mV）:3338
Cell voltage 3(mV)	Real-time data transmission of lithium battery, display example：CV 3（mV）:3338
Cell voltage 4(mV)	Real-time data transmission of lithium battery, display example：CV 4（mV）:3338
Cell voltage 5(mV)	Real-time data transmission of lithium battery, display example：CV 5（mV）:3338
Cell voltage 6(mV)	Real-time data transmission of lithium battery, display example：CV 6（mV）:3338
Cell voltage 7(mV)	Real-time data transmission of lithium battery, display example：CV 7（mV）:3338
Cell voltage 8(mV)	Real-time data transmission of lithium battery, display example：CV 8（mV）:3338
Cell voltage 9(mV)	Real-time data transmission of lithium battery, display example：CV 9（mV）:3338
Cell voltage 10(mV)	Real-time data transmission of lithium battery, display example：CV 10（mV）:3338
Cell voltage 11(mV)	Real-time data transmission of lithium battery, display example：CV 11（mV）:3338
Cell voltage 12(mV)	Real-time data transmission of lithium battery, display example：CV 12（mV）:3338
Cell voltage 13(mV)	Real-time data transmission of lithium battery, display example：CV 13（mV）:3338
Cell voltage 14(mV)	Real-time data transmission of lithium battery, display example：CV 14（mV）:3338
Cell voltage 15(mV)	Real-time data transmission of lithium battery, display example：CV 15（mV）:3338
Cell voltage 16(mV)	Real-time data transmission of lithium battery, display example：

	CV 16（mV）:3338
Cell voltage 17(mV)	Real-time data transmission of lithium battery, display example： CV 17（mV）:3338
Cell voltage 18(mV)	Real-time data transmission of lithium battery, display example： CV 18（mV）:3338
Cell voltage 19(mV)	Real-time data transmission of lithium battery, display example： CV 19（mV）:3338
Cell voltage 20(mV)	Real-time data transmission of lithium battery, display example： CV 20（mV）:3338

Module

It displays the information of each built-in power module. The menu interface of the module is shown in Fig. 4-11, and the interface description is shown in Table 4-11.

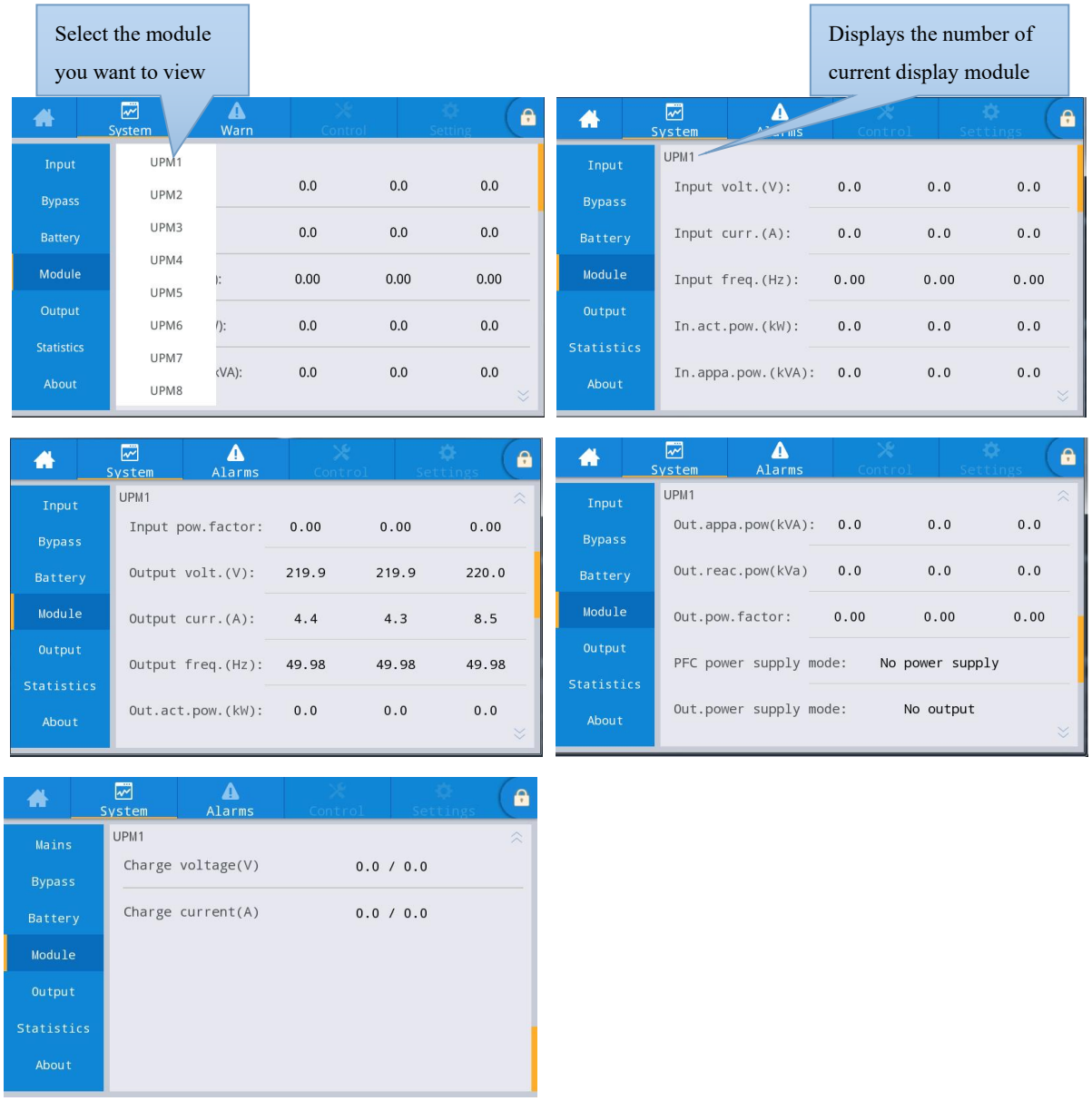

Fig. 4-11 Module interface

Table 4-11 Description of module interface

Display item	Description
Input volt. (V)	Input phase voltage of selected module
Input curr. (A)	Input phase current of selected module
Input freq. (Hz)	Input frequency of selected module
In.act. pow. (kW)	Input active power of selected module
In.appa. pow. (kVA)	Input apparent power of selected module
Input pow. factor	Ratio of the input active power to the input apparent power of selected module
Output volt. (V)	Output phase voltage of selected module
Output curr. (A)	Output phase current of selected module
Output freq. (Hz)	Output frequency of selected module
Out. act. pow. (kW)	Output active power of selected module
Out. appa. pow (kVA)	Output apparent power of selected module
Out. reac. pow (kVa)	Output reactive power of selected module
Out. pow. factor	Ratio of output active power to output apparent power of selected module
PFC power supply mode	Rectifier working mode: no power supply, mains power supply, battery power supply
OUT power supply mode	Output power supply mode: no output, inverter output, bypass output, Self-aging
Charge voltage (V)	Detected charging voltage of selected module
Charge current (A)	Detected charging current of selected module

Output

The interface of output menu is shown in Fig. 4-12, and the interface description is shown in Table 4-12.

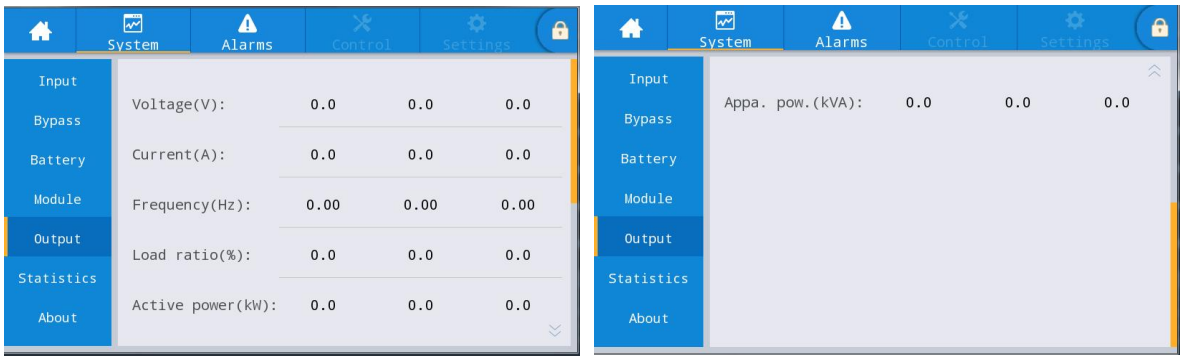

Fig. 4-12 Output interface

Table 4-12 Description of output interface

Display item	Description
Voltage (V)	AC output phase voltage.
Current (A)	AC output phase current.
Frequency (Hz)	AC output frequency.
Load ratio (%)	Load rate of each phase of the machine, i.e. the ratio of actual power to rated power.
Active power (kW)	Output active power of each phase of the UPS unit
Appa. pow. (kVA)	Output apparent power of each phase of the UPS unit

Statistics

The interface of statistics menu is shown in Fig. 4-13, and the interface description is shown in Table 4-13.

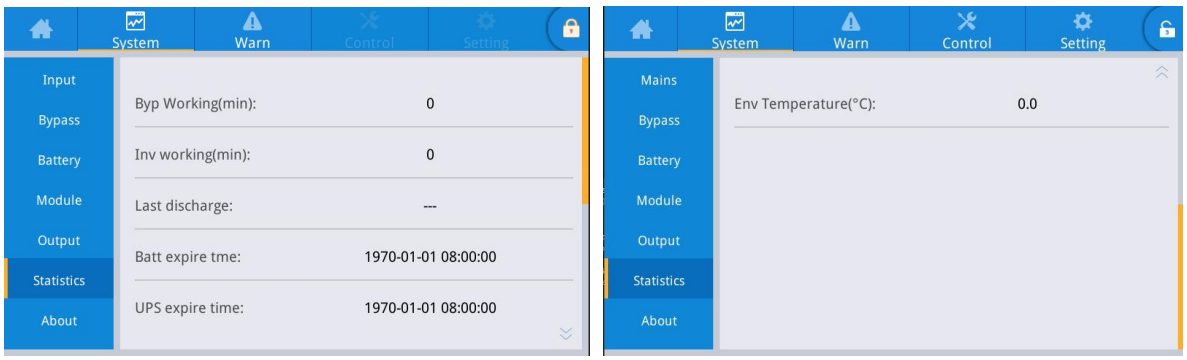

Fig. 4-13 Statistics interface

Table 4-13 Description of statistics interface

Display item	Description
Bypass runtime (min)	Accumulative operation time of UPS in bypass output status
Inv. Runtime (min)	Accumulative operation time of UPS in inverter output status
Last discharge	Date of previous discharge status of UPS
Batt. expire time	When the system time exceeds the warranty period, the status bar will prompt the warranty information of battery.
UPS expire time	When the system time exceeds the warranty period, the status bar will prompt the warranty information of main machine.
Ambient temperature (℃)	Current operating temperature of the UPS (Optional ambient temperature sensor are required. Display “NA” without connection)

About

The interface of About menu is shown in Fig. 4-14, and the interface description is shown in Table 4-14.

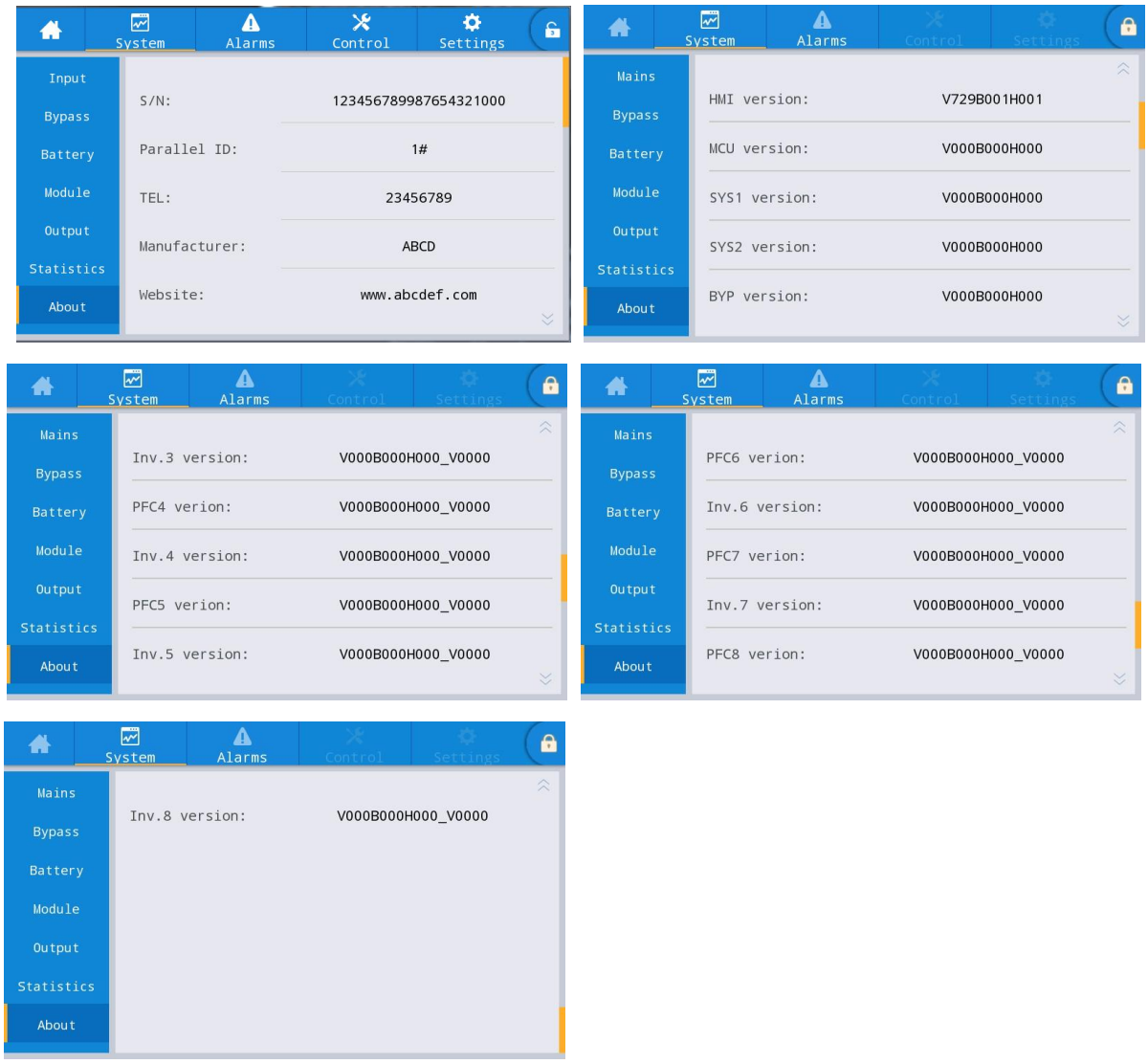

Fig. 4-14 About interface

Table 4-14 Description of Interface

Display item	Description
S/N	Production serial number of this machine
Parallel ID	Used for distinguishing cabinet address in parallel system
TEL	Contact information of after-sales service providers
Manufacturer	Manufacturer of this machine.
Website	Website of manufacturer of this unit
HMI version	Program version of HMI display system
MCU version	Program version of monitoring system
SYS1 version	System board1 DSP program version
SYS2 version	System board2 DSP program version
BYP version	Bypass control board DSP program version
PFC1 version	Power module1 rectifier control board DSP program version

Inv.1 version	Power module1 inverter control board DSP program version
PFC2 version	Power module2 rectifier control board DSP program version
Inv.2 version	Power module2 inverter control board DSP program version
PFC3 version	Power module3 rectifier control board DSP program version
Inv.3 version	Power module3 inverter control board DSP program version
PFC4 version	Power module4 rectifier control board DSP program version
Inv.4 version	Power module4 inverter control board DSP program version
PFC5 version	Power module5 rectifier control board DSP program version
Inv.5 version	Power module5 inverter control board DSP program version
PFC6 version	Power module6 rectifier control board DSP program version
Inv.6 version	Power module6 inverter control board DSP program version
PFC7 version	Power module7 rectifier control board DSP program version
Inv.7 version	Power module7 inverter control board DSP program version
PFC8 version	Power module8 rectifier control board DSP program version
Inv.8 version	Power module8 inverter control board DSP program version

4.2.4 Alarm

In the "*Alarms*" information interface, you can view "*Active alarm*", "*Fault record* ", "*Status record* " and "*Operating record*" from the secondary menu in the lower left corner.

The interface of alarm menu is shown in Fig. 4-15

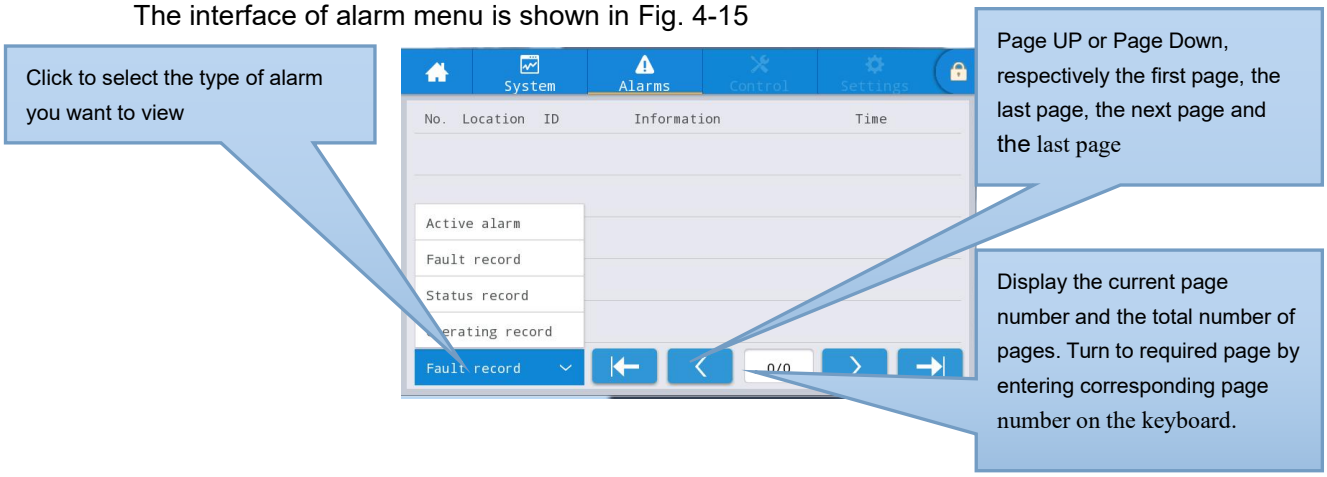

Fig. 4-15 Alarm menu interface

Active alarm

The active alarm interface displays the relevant information of the current warning of UPS system, as shown in Fig. 4-16. The interface description is shown in Table 4-15.

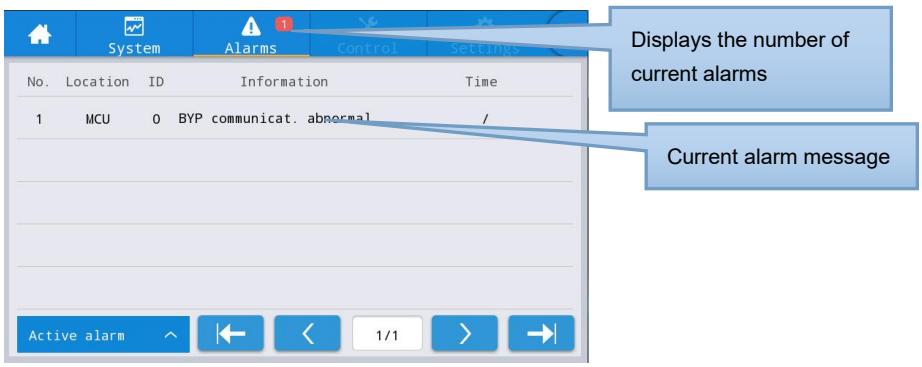

Fig. 4-16 Current alarm interface

Table 4-15 Description of active alarm interface

Display item	Description
No.	Alarm number
Location	Display the cabinet number and module number of the current alarm source.
ID	Alarm list code
Information	Current alarm name
Time	The current alarm is the current alarm information without time display.

History records

The "*history record*" is divided into "*Fault record* ", "*Status record* " and "*Operating record* ". Take "*Fault record* " as an example, the history record interface is shown in Fig. 4-17, and the interface description is shown in Table 4-16.

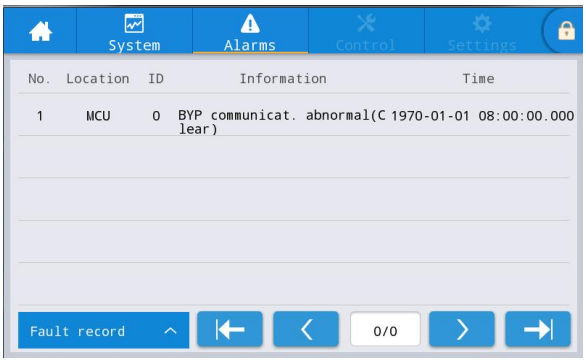

Fig. 4-17 History record interface

Table 4-16 Description of history record interface

Display item	Description
No.	Record number, which is listed in reverse order, that is to say the latest record is in the front.
Location	Displays the module number of the current record source.
ID	List code of fault, status or operation information for program analysis
Information	Current record name and record state (occurrence, disappearance).
Time	Record the time of occurrence or disappearance.

4.2.5 Control

In the "*Control* " information interface, you can select relevant operation from the left secondary menu, which contains "*On-Off* ", "*Maintain*" and "*Upgrade*".

On-Off

The interface of the On-Off menu is shown in Fig. 4-18, and the interface description is shown in Table 4-17.

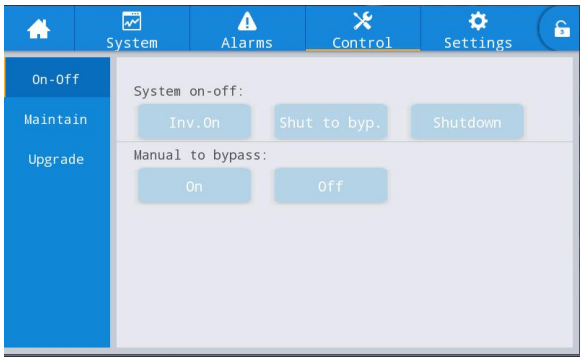

Fig. 4-18 On-Off interface

Table 4-17 Description of On-Off interface

Control item	Description
System on-off	Including “*Inv.On*”, “*Shut to bypass*” and “*Shutdown*”. It is gray when clicking is invalid.
Manual to bypass	Including “*On*” and “*Off*”. It is gray when clicking is invalid. If the bypass is abnormal, switching to bypass fails.

Maintenance

The interface of maintenance menu is shown in Fig. 4-19, and the interface description is shown in Table 4-18.

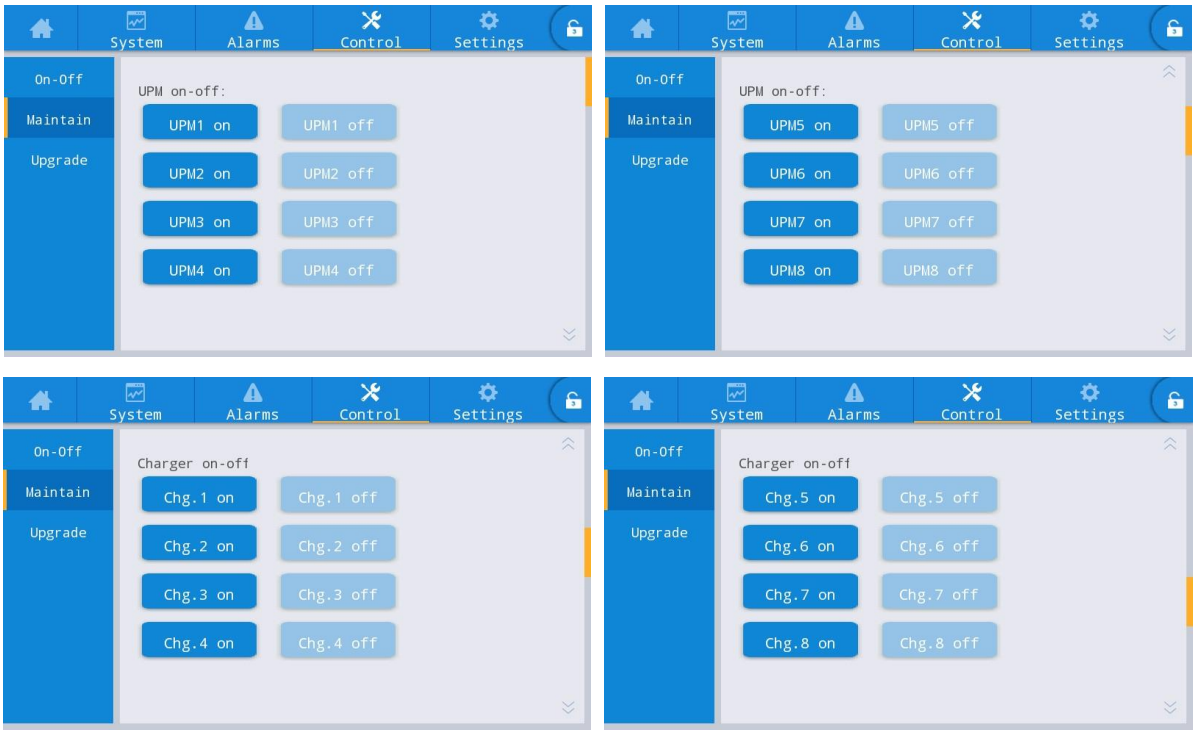

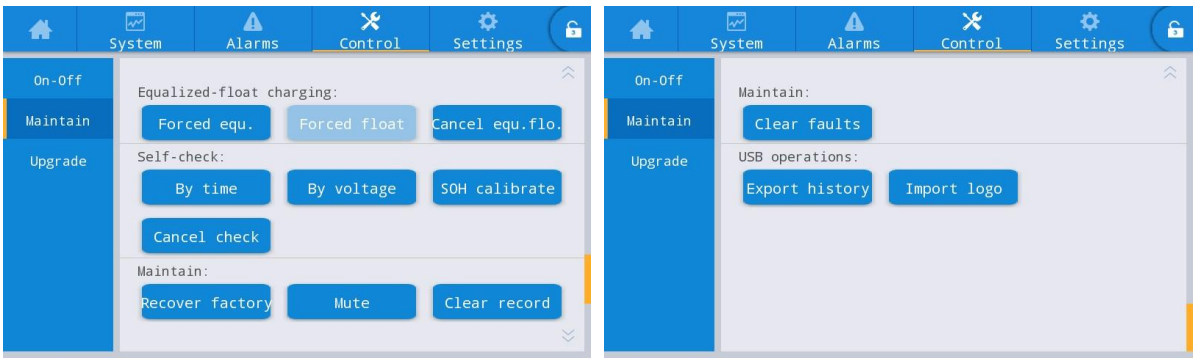

Fig. 4-19 Maintenance interface

Table 4-18 Description of maintenance interface

Control item	Description
Module On-off	Control ON/ Off of each online module.
Charger On-off	Control ON/ Off of online module charger.
Forced equalizing and floating charge control	Including forced equalizing charge, forced floating charge, canceling forced equalizing/floating charge which are used only when the battery is abnormal and make maintenance inspection.
Self-check control	Including self-test by time, self-test by voltage, SOH calibration and self-test cancellation.
Maintenance Management	Including factory reset, mute buzzer, clearing history records and clearing faults.
USB operations	Including exporting history records (export excel file) and importing LOGO (import boot animation).

Export History

The USB device is required to connect, and the exported history file will appear in the root directory. The information format of the history export file is shown in Figure 4-20, and the table description is shown in Table 4-19.

Time	Ms	Type	Source	ID	Event	Status	Value
2020/12/30 15:37	895	FAULT	ECU1	640	Bypass flowing backwards	Disappear	0
2020/12/30 15:37	895	FAULT	ECU2	640	Bypass flowing backwards	Disappear	0
2020/12/30 15:37	895	FAULT	ECU1	640	Bypass flowing backwards	Occur	0
2020/12/30 15:37	895	FAULT	ECU2	640	Bypass flowing backwards	Occur	0
2020/11/2 14:43	600	FAULT	PFC4	339	Battery disconnected	Disappear	0
2020/11/2 14:43	900	FAULT	PFC1	339	Battery disconnected	Disappear	0
2020/11/2 14:43	900	FAULT	PFC2	339	Battery disconnected	Disappear	0
2020/11/2 14:43	900	FAULT	PFC3	339	Battery disconnected	Disappear	0
2020/11/2 11:37	520	FAULT	INV7	603	Bypass phase A	Occur	0
2020/11/2 11:37	520	FAULT	INV7	604	Bypass phase B	Occur	62
2020/11/2 11:37	520	FAULT	INV7	605	Bypass phase C	Occur	83
2020/11/2 8:35	487	EVENT	PFC12	1414	Mains power supply	/	0
2020/11/2 8:35	487	EVENT	PFC1	1414	Mains power supply	/	0

Figure 4-20 The exported history file

Table 4-19 Table information description

Mointor	Monitoring board
ECU1	System board 1
ECU2	System board 2
PFC1	Rectifier board 1
PFC2	Rectifier board 2
INV1	Inverter board 1
INV2	Inverter board 2
Time	The occurrence / disappearance time of the record
Ms	The number of milliseconds that the record occurs
Type	There are three types: Operation record (Opera), fault record (Fault) and event record (Event)
Source	Source of the record
ID	Fault list code
Event	Name of the record
Status	Status of the record（occur/disappear）
Value	Setting value / fault value
Mointor	Monitoring board

Firmware upgrading

The interface of firmware upgrade menu is shown in Fig. 4-21, and the interface description is shown in Table 4-20.

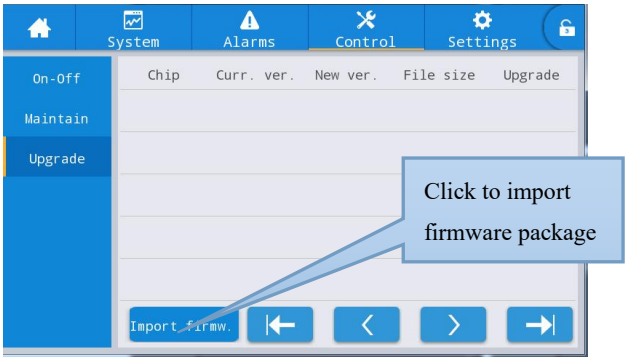

Fig. 4-21 Firmware upgrading interface

Table 4-20 Description of firmware upgrading interface

Display item	Description
Chip	Displays the name of the online chip.
Current version	Displays the current program version of the chip.
Version of new firmware	Version of chip program in the firmware package.
File length	File length of chip program in the firmware package.
Upgrade	When the chip program in the firmware package is verified successfully, the upgrade button will be displayed, and click it to upgrade; When file verification fails, the upgrade button is hidden and no upgrades will be allowed.

4.2.6 Settings

Common settings

The interface of common settings menu is shown in Fig. 4-22, and the interface description is shown in Table 4-21.

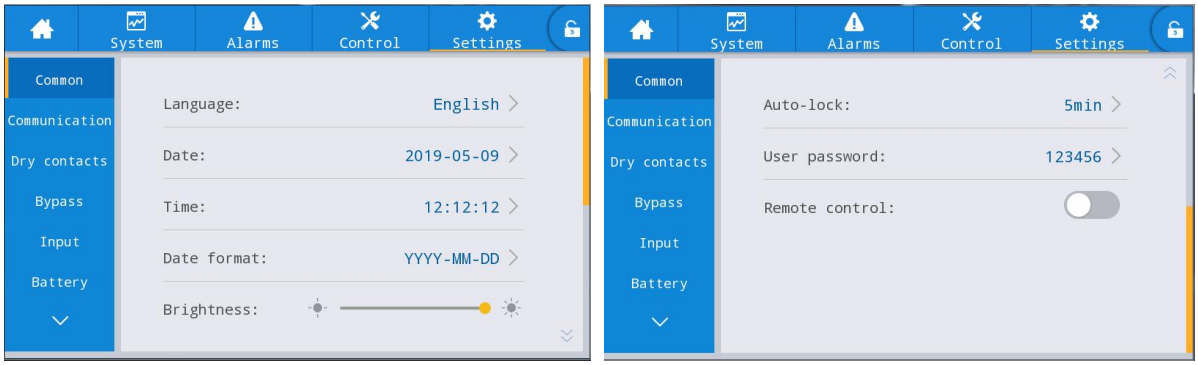

Fig. 4-22 Common setting interface

Table 4-21 Description of common setting interface

Setting item	Default	Options	Description
Language	English	English	Display in English.
YYYY-MM-DD	2016-01-01	2000-01-01~2099-12-31	Set the current date.
Time	00:00:00	00:00:00~23:59:59	Set the current time.
Date format	Y-M-D	Y-M-D, M-D-Y, D-M-Y	Support 3 formats: Y-M-D, M-D-Y, D-M-Y.
Brightness	100%	0% ~ 100%	Adjust backlight brightness by moving the slider.
Auto-lock	5 min	0 ~ 30 min	Set screen time out. 0 is set to keep the screen on.
User password	123456	0 ~ 99999999	The user can change the password, which can be set to 1-8 digits.
Remote control	Disabled	Enabled, disabled	For setting table for function code of user version MODBUS protocol 03; when enabled, remote setting is supported for the control items - "*buzzer mute*", "*On-off*" and "*system clock*"; Remote control is not supported when disabled.

Communication settings

The interface of the communication setting menu is shown in Fig. 4-23, and the interface description is shown in Table 4-22.

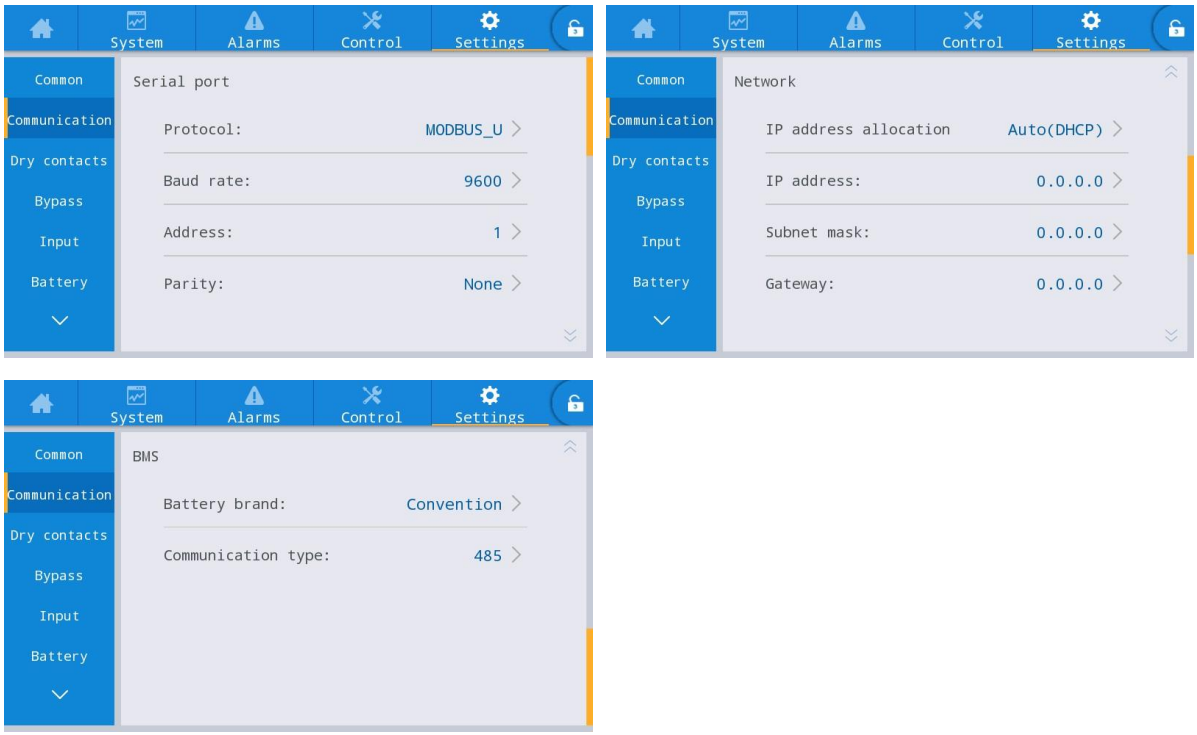

Fig. 4-23 Communication settings interface

Table 4-22 Description of communication settings interface

Setting item	Default	Description
Protocol	User MODBUS	Set the communication protocol of selecting 1 out of 3 communication port, User MODBUS, R&D MODBUS, MEGATEC are optional.
Baud rate	9600	2400, 4800, 9600, 14400, 19200, 38400 optional.
Address	1	1~247 optional.
Parity	None	No check, odd check, even check are optional.
IP address allocation	Dynamic（DHCP）	Optional dynamic allocation and static allocation; When the UPS is connected to the router, it can be set to dynamic, and the router automatically assigns the address. When UPS is directly connected to the computer, manual assignment is set and the UPS IP address is set to be in the same subnet as the computer IP address.
IP address	0.0.0.0	Set UPS IP address.
Subnet mask	0.0.0.0	Set UPS subnet mask.
Gateway	0.0.0.0	Set UPS gateway.
Battery BMS(lithium battery only)	Battery brand:convention	Select the actual lithium battery brand, so that UPS can communicate with lithium battery normally.
	Communication type：485	The communication mode between UPS and lithium battery, RS485 or CAN is optional, and RS485 is the default

Dry contact settings

The interface of dry contact setting menu is shown in Fig. 4-24, and the interface description is shown in Table 4-23.

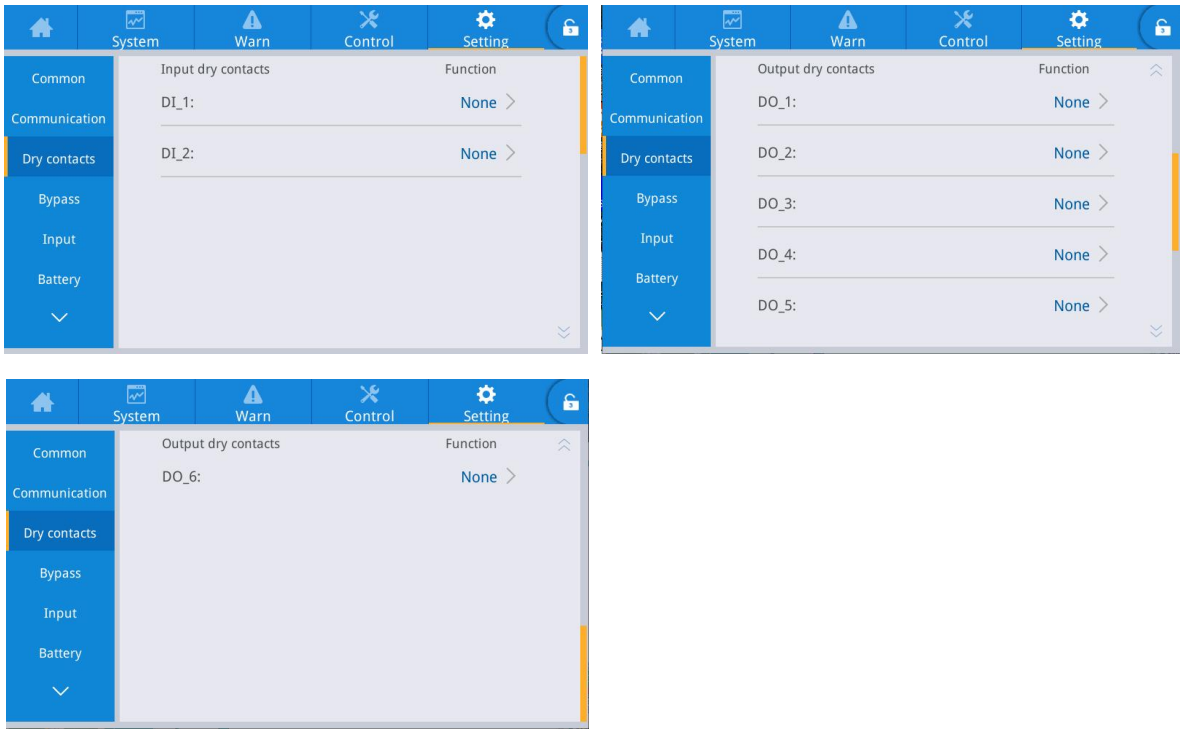

Fig. 4-24 Dry contact setting interface

Table 4-23 Description of dry contact setting interface

Setting item	Default	Options	Description
DI_1~DI_2	None	None/Door contact alarm /waterlogging alarm	There are two input dry contact interfaces. None/Door contact alarm /waterlogging alarm can be set. Unused dry contacts should be set to None, otherwise it will affect the normal operation of the UPS.
DO_1~DO_6	None	None/Critical alarm/Minor alarm /Bypass power supply/Battery power supply/Low batt.volt.(DOD)/Low batt.volt.(EOD)/ D.G.control/Batt. breaker release/Bypass fault/Fan fault/Time-share power down	There are external 6 output dry contact interfaces. When configuring dry contacts, setting relevant dry contacts is required, and the unused dry contacts should be set to none, otherwise it will affect the normal operation of the UPS.

Bypass parameters

The interface of the bypass parameters menu is shown in Fig. 4-25, and the interface description is shown in Table 4-24.

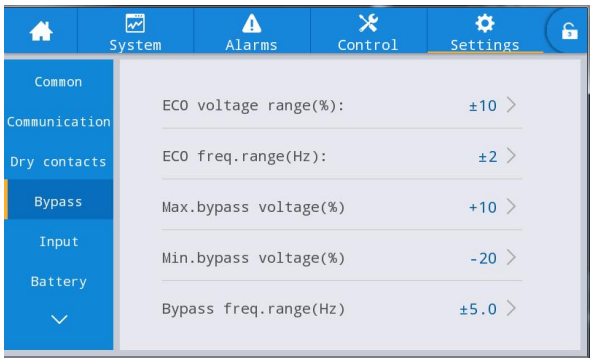

Fig. 4-25 Bypass parameters interface

Table 4-24 Description of bypass parameters interface

Setting item	Default	Options	Description
ECO voltage range (%)	±10	±5/±6/±7/±8/±9/±10	When the deviation of the bypass voltage relative to the rated voltage exceeds the set value, the system determines that the ECO voltage is abnormal, and the system is changed to be powered by the inverter. Note that the voltage and frequency range of the ECO should be smaller than the voltage and frequency range of the bypass. For example, if the bypass frequency range is set to ±2HZ, then the ECO frequency range can only be set to ±1HZ.
ECO freq.range (Hz)	±2	±1/±2/±3	
Max.bypass voltage (%)	+15	+10/+15/+20/+25	The maximum setting range is 88 V to 276 V, which is generally within the acceptable voltage range of the user's electrical equipment.
Min.bypass voltage (%)	-20	-10/-20/-30/-40/-50/-60	
Bypass freq.range (Hz)	±5.0	±2.0/±3.0/±4.0/±5.0/±6.0	Note that the bypass frequency range cannot be less than the ECO frequency range.

Input parameters

The interface of input parameters menu is shown in Fig. 4-26, and the interface description is shown in Table 4-25.

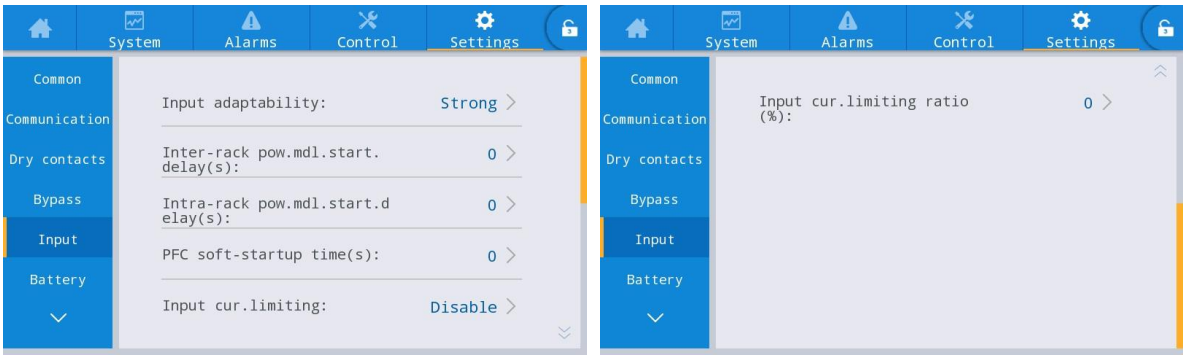

Fig. 4-26 Input parameters interface

Table 4-25 Description of input parameters interface

Setting item	Default	Options	Description
Input adaptability	Strong	Strong/Weak	The strong input adaptability mode applies to oil machine or input sources with high-frequency oscillation input current, and THDi in this mode is slightly worse, but the system is more stable. The weak input adaptability mode applies to input sources with better performance, such as mains power and AC voltage source, and THDi in this more is better.
Inter-rack pow.mdl.start.delay (s)	2	2 ~ 120	In the process of battery inverter power being transferred to main circuit inverter power, control the interval time for each rack to be transferred to main circuit power in turn by setting the start delay of intelligent generator between racks, so as to reduce the impact of UPS on generator or power grid.
Intra-rack pow.mdl.start.delay (s)	2	2 ~ 300	By setting the start-up delay of power units in the rack, the interval time of each module switching to the main power supply in turn is controlled in the process of battery inverter power supply switching to the main power supply, so as to reduce the impact of ups on the generator or power grid.
PFCsoft-startup time (s)	10	0 ~ 60	By setting the soft start time of the rectifier, the impact of ups on the power components of the module in the process of switching from the commercial power rectifier to the PFC is reduced, and the stability of the PFC is ensured.
Input cur. limiting	Enable	Enable/Disable	According to the actual needs of users, set whether the UPS system controls the input current limit to protect the generator equipment.
Input cur.limiting ratio (%)	200	50 ~ 200	When the input current limit is selected as Enable, the current limit value of the main circuit input can be set. Its unit is the percentage of the rated input current, ranging from 50% to 200%, according to the output capacity of the generator equipment.

Battery parameters

The interface of battery parameters menu is shown in Fig. 4-27, and the interface description is shown in Table 4-26.

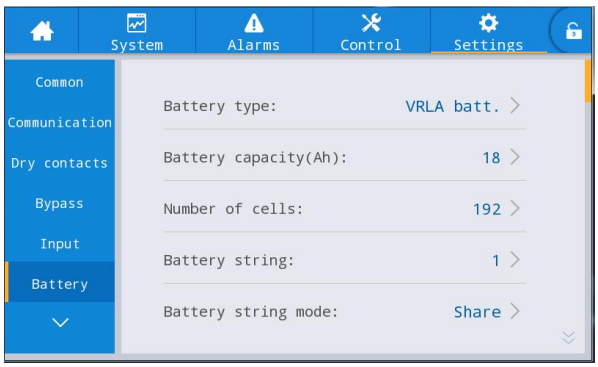
System
Alarms
Control
Settings
Common
Communication
Dry contacts
Bypass
Input
Battery
Battery type: VRLA batt.
Battery capacity(Ah): 18
Number of cells: 192
Battery string: 1
Battery string mode: Share

System
Alarms
Control
Settings
Common
Communication
Dry contacts
Bypass
Input
Battery
Battery auto self-check: None
Start to auto self-check: 00:00
Stop to auto self-check: 06:00
Constant cur.equ.chg.time (h): 24.0
Max.batt.dis.time(h): NA

System
Alarms
Control
Settings
Common
Communication
Dry contacts
Bypass
Input
Battery
Auto self-check period(d): 60
Self-check time(h): 0.0
Self-check under volt. (V/cell): 1.70
Backup time warning: Disable
Backup time warn.thresh. (min): 5

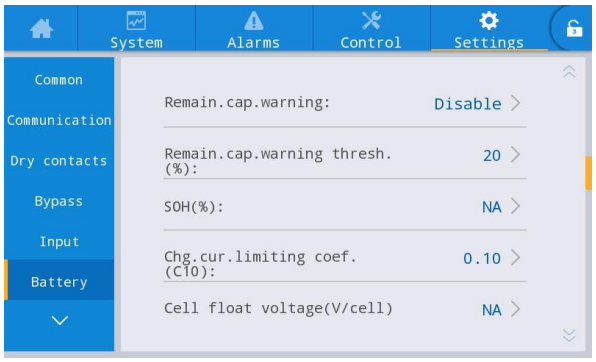
System
Alarms
Control
Settings
Common
Communication
Dry contacts
Bypass
Input
Battery
Remain.cap.warning: Disable
Remain.cap.warning thresh. (%): 20
SOH(%): NA
Chg.cur.limiting coef. (C10): 0.10
Cell float voltage(V/cell) NA

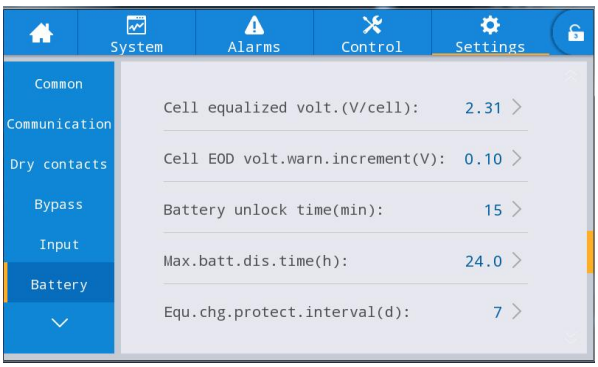
System
Alarms
Control
Settings
Common
Communication
Dry contacts
Bypass
Input
Battery
Cell equalized volt.(V/cell): 2.31
Cell EOD volt.warn.increment(V): 0.10
Battery unlock time(min): 15
Max.batt.dis.time(h): 24.0
Equ.chg.protect.interval(d): 7

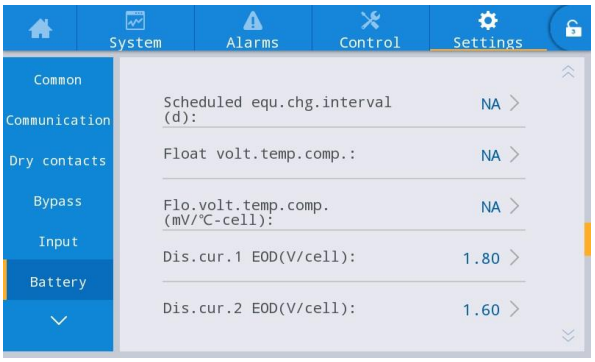
System
Alarms
Control
Settings
Common
Communication
Dry contacts
Bypass
Input
Battery
Scheduled equ.chg.interval (d): NA
Float volt.temp.comp.: NA
Flo.volt.temp.comp. (mV/℃-cell): NA
Dis.cur.1 EOD(V/cell): 1.80
Dis.cur.2 EOD(V/cell): 1.60

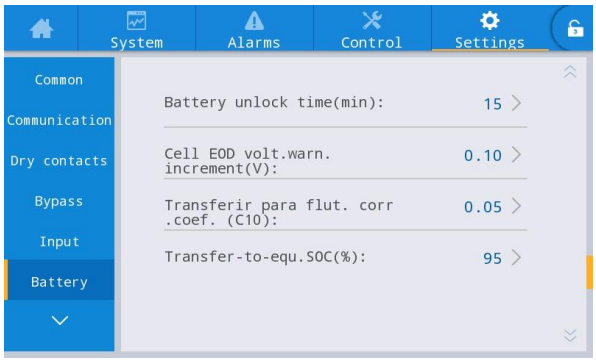
System
Alarms
Control
Settings
Common
Communication
Dry contacts
Bypass
Input
Battery
Battery unlock time(min): 15
Cell EOD volt.warn. increment(V): 0.10
Transferir para flut. corr .coef. (C10): 0.05
Transfer-to-equ.SOC(%): 95

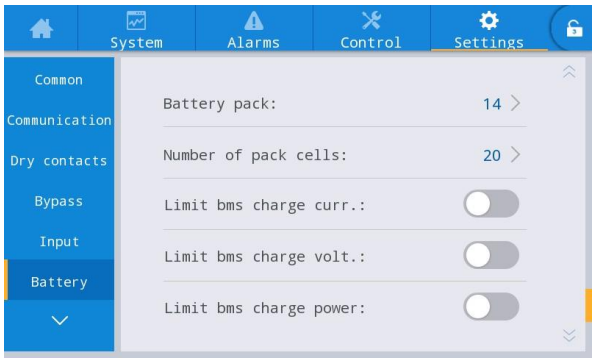
System
Alarms
Control
Settings
Common
Communication
Dry contacts
Bypass
Input
Battery
Battery pack: 14
Number of pack cells: 20
Limit bms charge curr.:
Limit bms charge volt.:
Limit bms charge power:

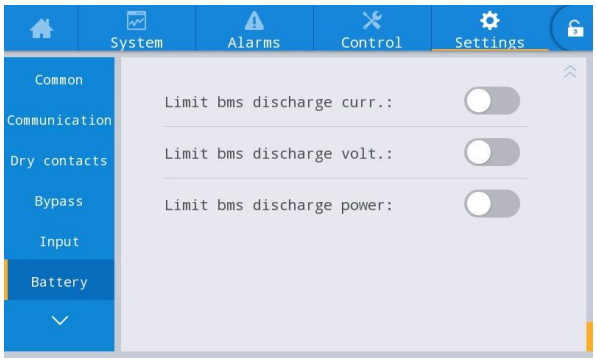

Fig. 4-27 Battery parameters interface

Table 4-26 Description of battery parameters interface

Setting item	Default	Options	Description
Battery type	Lead-acid battery	Lead-acid battery/ lithium battery	The type of battery connected to the UPS system, the supported lithium battery type is 3.2V lithium iron phosphate battery.
Battery capacity (Ah)	100	5~3000	Single battery string capacity connected to UPS system.
Number of cells	Lead-acid batter:240 lithium battery:160	Lead-acid batter:180~276 （30-46 cells） lithium battery:120~160	Set up according to the total number of battery cells connected to the UPS system. Normally each lead-acid battery has 6 battery cells, and each lithium battery module has 15 or 16 cells. Lead acid: default 240, optional 180-276, 12 integer multiples. Lithium battery: default 160, optional 120-160, 15/16 integer multiples. Lithium battery default value: 3.2V*16*10=512V Optional 8/10 modules (±4/±5, 15 or 16 cells per module), that is, the number of optional battery cells is 120/128/150/160 (integer multiples of 15 or 16)
Battery string	1	Lead-acid battery:1~10 lithium battery:1~14	The number of battery strings connected in parallel to the UPS system
Battery string sharing mode	Lead-acid battery: shared lithium battery: independent	Shared/independent	When multiple UPSs are in parallel, you can choose to share a set of batteries or use battery string for each stand-alone UPS independently.
Battery auto self-check	Off	Off/by time/by voltage	After this function is enabled, the UPS system will automatically switch to battery mode to discharge according to relevant setting requirements.

Setting item	Default	Options	Description
Start to auto self-check	00:00	00:00~23:59	After the automatic battery self-check is enabled, the UPS system will switch to the battery inverter mode at the set time to start the discharge self-check.
Stop to auto self-check	06:00	00:00~23:59	After the automatic battery self-check is enabled, the UPS system will switch from battery inverter to mains inverter at the set time to stop the self-check.
Constant cur. equ. chg. time (h)	24.0	0~100.0	The battery is in the equalizing stage, the duration time of constant current equalizing charge.
Max. batt. dis. time (h)	24.0	0~48.0	When the battery is discharged, the longest continuous discharge time. After the discharge time reaches this value, if the bypass is normal, it will switch to the bypass. If the bypass is abnormal, the system will power down and shut down.
Auto self-check period (d)	60	30~90	After the automatic battery self-check is enabled, the UPS system will perform battery discharge self-check within the set time period on the day according to the set number of days.
Self-check time (h)	0.0	0.0~23.0	After the automatic battery self-check enable option is selected for self-check by time, the UPS system will perform battery inverter discharge self-check within the set time period, and exit the self-check after the battery self-check lasts for the set time. Note that the set battery self-check time must be within the set automatic self-check time period, otherwise the self-check will fail. After the automatic battery self-check enable option is selected for self-check under voltage, the UPS system will switch to battery inverter mode for self-check until the battery cell voltage reaches the set self-check end voltage and then exit the self-check, or when the set end time is reached, the UPS will exit the self-check.
Self-check under volt. (V/cell)	Lead-acid battery:1.70 lithium battery:3.10	Lead-acid battery:1.60~1.90 Lead-acid battery:2.50~3.50	
Backup time warning	Enable	Enable/disable	If the alarm function is enabled, the system will give an alarm when the backup power

Setting item	Default	Options	Description
Backup time warn. thresh. (min)	5	3~30	time reaches the set value.
Remain. cap. warning	Enable	Enable/disable	If the alarm function is enabled, the system will give an alarm when the remaining capacity reaches the set value.
Remain. cap. warning thresh. (%)	20	5~50	
SOH(%)	100	0~100	The ratio of the actual battery capacity to the nominal capacity after a battery has been used for a period of time.
Chg. cur. limiting coef. (C10)	Lead-acid battery: 0.10 lithium battery: 0.20	Lead-acid battery: 0.05~0.15 lithium battery: 0.05~1.00	User can set the limit of charging current.
Cell float voltage（V/cell）	Lead-acid battery: 2.25 lithium battery: 3.40	Lead-acid battery: 2.23~2.27 lithium battery: 3.30~3.65	Single battery charging voltage in floating charge status.
Cell equalized volt.（V/cell）	Lead-acid battery: 2.31 lithium battery: 3.40	Lead-acid battery: 2.30~2.40 lithium battery: 3.30~3.65	Single battery charging voltage in equalized charge status.
Batt. high temp. alarm (℃)	50（30）	45（20）~55	The battery temperature can be monitored in a timely manner. When it is detected that the battery temperature is higher than the high temperature alarm point or lower than the low temperature alarm point, the system will give an alarm.
Batt. low temp. alarm (℃)	-5	-20~5	
Equ. chg. protect. interval (d)	7	0~15	After the last equalized charge is completed normally and converted to floating charge, if the battery is not discharged, the system will set the required interval time for the battery of equalized charge.
Scheduled equ. chg. interval (d)	60	30~180	When the equalized charge process is over and the duration reaches the interval of regular equalization, the system will automatically equalize charge the battery.

Setting item	Default	Options	Description
Float volt. temp. comp.	Disable	Enable/disable	If this function is enabled, the system can automatically perform temperature compensation correction on the float voltage value according to the battery temperature, and the temperature reference value for temperature compensation is 25℃
Flo. volt. temp. comp.coef.(mV/℃-cell)	3.3	0~6.0	Lead acid: When the discharge current is 0.1C, the EOD point voltage of the single battery Lithium battery: When the discharge current is 2C and below, the EOD point voltage of the single battery
Dis. cur. 1 EOD(V/cell)	Lead-acid battery: 1.80 lithium battery: 3.00	Lead-acid battery: 1.75~1.90 lithium battery: 2.50~3.00	
Dis. cur. 2 EOD(V/cell)	Lead-acid battery: 1.60 lithium battery: 2.70	Lead-acid battery: 1.60~1.75 lithium battery: 2.50~3.00	Lead acid: When the discharge current is 1.0C, the EOD point voltage of the single battery Lithium battery: When the discharge current is more than 2C, the EOD point voltage of the single battery
Battery unlock time (min)	15	1~60	If the number of switching between the mains inverter and the battery inverter reaches 5 times in one hour, it will be locked in the battery inverter state, and the time required to unlock the lock can be set through this option.
Cell EOD volt. warn. increment (V)	0.10	0~0.20	Add this setting value on the basis of the EOD point voltage of the single battery. If the voltage of the single battery reaches this value, the battery EOD pre-warning will be reported.
Constant volt. equ. chg. time (h)	48.0	0~100.0	The battery is in the equalizing stage, the duration time of constant voltage equalized charge.
Transferir para flut. corr. coef.(C10)	0.05	0.02~0.08	User can set the limit value of floating charging current
Transfer-to-equ.SOC(%)	95	0-100	User can set the remaining capacity of the battery for equalized charging
Battery pack	Lead-acid battery: None lithium battery: 10	Lead-acid battery: None lithium battery: 1-14	Set the number of lithium battery packs, if the online value is inconsistent with the set value, an alarm will be issued

Setting item	Default	Options	Description
Number of pack cells	Lead-acid battery: None lithium battery: 16	Lead-acid battery: None lithium battery: 1-20	Set the number of lithium battery pack cells, if the online value is inconsistent with the set value, an alarm will be issued
Limit bms charge curr.	Lead-acid battery: None lithium battery: Disabled	Lead-acid battery: None lithium battery: Enabled/disabled	Set BMS charging current limit, default: disabled
Limit bms charge volt.	Lead-acid battery: None lithium battery: Disabled	Lead-acid battery: None lithium battery: Enabled/disabled	Set BMS charging voltage limit, default: disabled
Limit bms charge power	Lead-acid battery: None lithium battery: Disabled	Lead-acid battery: None lithium battery: Enabled/disabled	Set BMS charging power limit, default: disabled
Limit bms discharge curr.	Lead-acid battery: None lithium battery: Disabled	Lead-acid battery: None lithium battery: Enabled/disabled	BMS discharge current limit, default: disabled
Limit bms discharge volt.	Lead-acid battery: None lithium battery: Disabled	Lead-acid battery: None lithium battery: Enabled/disabled	BMS discharge voltage limit, default: disabled
Limit bms discharge power	Lead-acid battery: None lithium battery: Disabled	Lead-acid battery: None lithium battery: Enabled/disabled	BMS discharge power limit, default: disabled

Output parameters

The interface of output parameters menu is shown in Fig. 4-28, and the interface description is shown in Table 4-27.

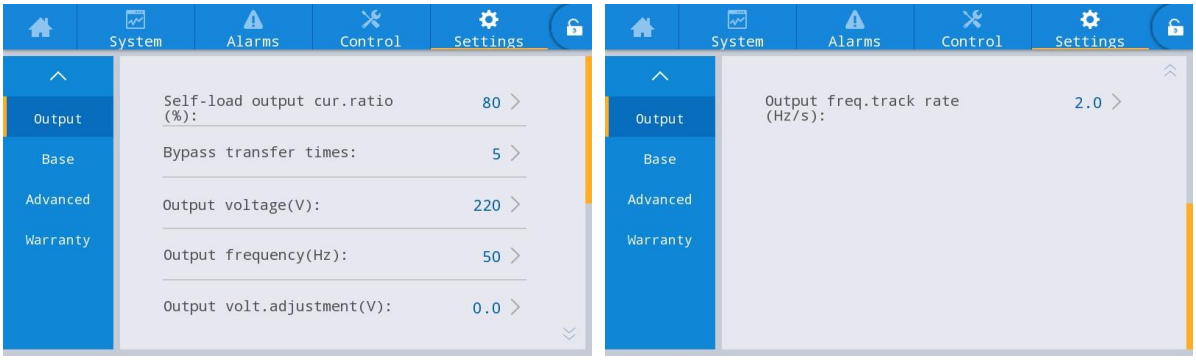

Fig. 4-28 Output parameters interface

Table 4-27 Description of output parameters interface

Setting item	Default	Options	Description
Self-load output cur. ratio (%)	80	20 ~ 100	It is percentage of output current in rated output current in self-aging mode.
Bypass transfer times	5	1 ~ 10	1 ~ 10 times is optional. 5 times is default. If the bypass switching times reach the configured value within one hour, the system will be locked. If it is in normal mode, the system will be locked at the bypass end supplying power; if it is in ECO mode, it will be locked at the inverter end supplying power.
Output voltage (V)	220	220/230/240	The user sets it according to the output voltage amplitude acceptable by the load, which should be set in the state of no output.
Output frequency (Hz)	50	50/60	The user shall set it according to the output voltage frequency acceptable to the load, which shall be set in the output state of shutdown
Output volt. adjustment (V)	0.0	-5.0 ~ 5.0	Fine tune the output voltage according to the customer's field power distribution.
Output freq. track rate (Hz/s)	2.0	0.5 ~ 2.0	Set according to the load capacity. If the tracking rate is too slow, when the bypass frequency changes, it will lead to the inverter working frequency and the bypass frequency in an asynchronous state.

Basic parameters

The interface of basic parameters menu is shown in Fig. 4-29, and the interface description is shown in Table 4-28.

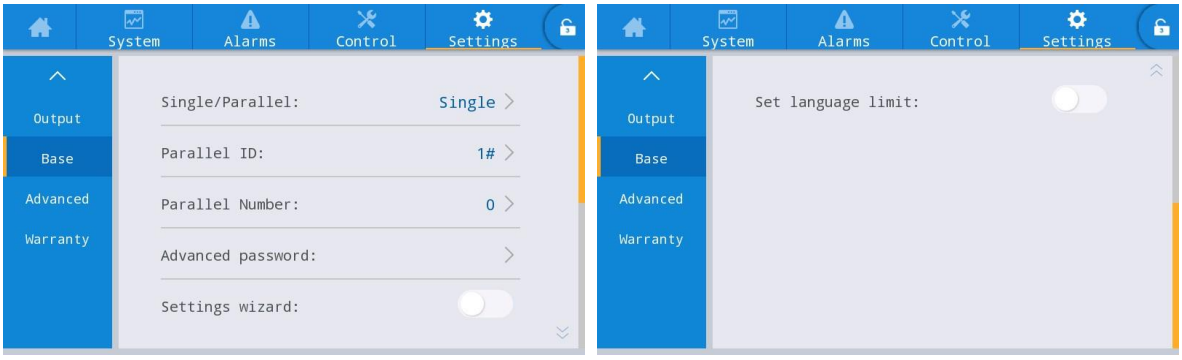

Fig. 4-29 Basic parameters interface

Table 4-28 Description of basic parameters interface

Setting item	Default	Options	Description
Single/Parallel	Single	Single/Parallel	Set according to the actual number of online frames in the system. Select *Single* when only 1 frame works. Select *Parallel* when 2 frames work.
Parallel ID	1#	1~2	Each single unit needs to be numbered in parallel system, and their numbers cannot be same.
Number of system frames	1	1~2	The system is divided into stand-alone system and parallel system, and up to 2 frames can be selected in the system.
Advanced password	/	0~99999999	Only authorized qualified electricians can use and change the password, which can be set to 1-8 digits, and cannot be same with the user password. Customers who need to know the password should consult the supplier.
Settings wizard	Enabled	Enabled/ Disabled	After being enabled, the UPS will enter the quick settings interface at next time when turn on it.
Set language limit	Disabled	Enabled/ Disabled	After being enabled, the language is limited to a special language and the language cannot be set.

Advanced parameters

The interface of advanced parameters menu is shown in Fig. 4-30, and the interface description is shown in Table 4-29.

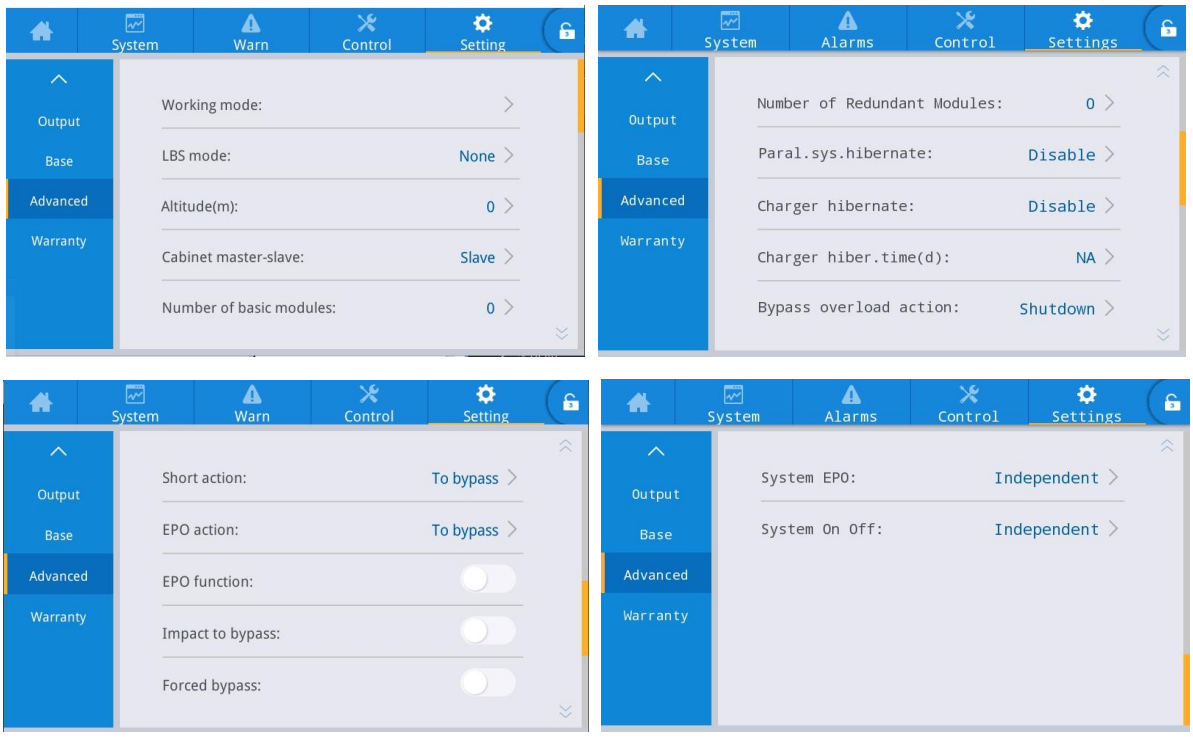

Fig. 4-30 Advanced parameters interface

Table 4-29 Description of advanced parameters interface

Setting item	Default	Options	Description
Operating mode	Normal	Normal/ECO/Self-aging/Inverter	Select the corresponding working mode according to customer needs, the normal situation is the normal working mode.
LBS mode	Non-LBS	Non-LBS/ Master LBS/ Slave LBS	If the customer needs to use the double bus system, it can be set according to the actual situation.
Altitude(m)	1000	0~3000	According to the actual situation of the customer on site, the output capacity will determine whether to conduct automatic reduction processing according to the setting value. For details, please refer to the reduction description of "Technical Parameters" in Chapter 8.
Frame master and slave settings	Master	Master/Host	This setting item does not need to be set and is automatically allocated by the system.
Number of basic modules in the frame	8	1~8	Number of power modules in the frame
Number of redundant modules in the frame	0	0~7	The number of redundant modules required within the frame
Intelligent parallel sleep mode	Prohibited	Prohibited/ Allowed	Set up intelligent parallel sleep according to system configuration and customer requirements, so that the parallel system automatically determines the number of UPS units or modules that are put into operation according to the current total load size. Under the condition that there should be redundant power supply, quit the redundant UPS and put it into the sleep state to achieve the purpose of safe operation and energy saving.
Charger sleep	Allowed	Prohibited/ Allowed	If the setting is allowed, the charger will enter the sleep state when it meets the sleep condition; If set to prohibited, the charger will not go to sleep.
Charger sleep time (d)	28	28~60	When the "charger sleep" function is set to allow, after the charger enters the sleep state, if it reaches the set time, it will exit the sleep state.
Bypass overload	Output off	Output off, no action	When the bypass overload time expires, the UPS system will cut off the output or not act. This option needs to be authorized by the manufacturer, otherwise there is no warranty. Choosing the "do not act" option may cause the system to fail to protect the bypass in time and damage the bypass device.

Setting item	Default	Options	Description
Short circuit action	To bypass	To bypass, output off	When an output short circuit occurs in the UPS system, the UPS system will be turned to bypass power supply or off output.
EPO action	To bypass	To bypass, output off	According to the actual requirements of the customer, when the EPO alarm is triggered, the corresponding action of the UPS system is to turn to bypass or cut off the output. Under normal circumstances, please choose to cut off the output.
EPO function	Enable	Enable/ disable	Set whether to enable the emergency shutdown function according to the actual needs of the customer.
Impact to bypass	Enable	Enable/ disable	When set to enabled, the impact load causes the OUTPUT voltage of the UPS system to drop rapidly and the system switches to bypass mode for a short period of time.
Forced bypass	disable	Enable/ disable	If set to enabled, when the UPS system needs to switch to the bypass output power supply, the UPS system will still switch to the bypass mode for power supply even if the bypass voltage is abnormal. Unable to switch to bypass mode when bypass is uHV. This should be set carefully.
Unified System EPO action	disable	Enable/ disable	When the UPS system needs to work in the parallel system, it will set whether to enable EPO system to perform unified actions according to customer requirements. If so, when one machine reports EPO failure, the whole system will report EPO failure.
Unified System ON/OFF	disable	Enable/ disable	When the UPS system needs to work in the parallel system, it will set whether to enable the system to perform unified switch ON/OFF actions according to customer requirements.

Warranty expiration settings

The interface of the warranty expiration settings menu is shown in Fig. 4-31, and the interface description is shown in Table 4-30.

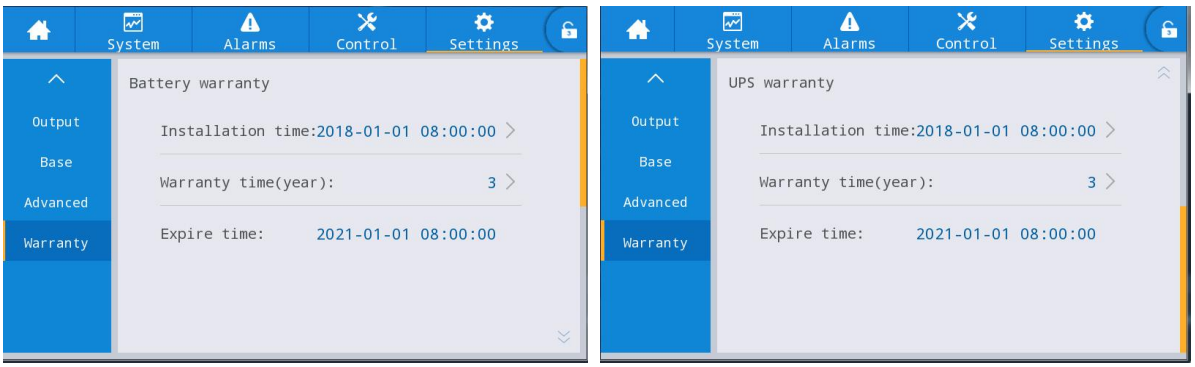

Fig. 4-28 Warranty expiration settings interface

Table 4-27 Description of warranty expiration settings interface

Setting item	Default	Options	Description
Battery Installation time	2018-01-01 00:00:00	Any value	Click the popup box to confirm the update to the current time.
Battery Warranty time (year)	Lead-acid battery:3 years Lithium battery: 5 years	1 ~ 50	Set according to the actual battery warranty time for the users.
Battery Expire time	2021-01-01 00:00:00	Not settable	The warranty expiration time is automatically generated according to installation time and warranty time. When the system time exceeds the warranty period, the status bar of home page will prompt the warranty information.
UPS Installation time	2018-01-01 00:00:00	Any value	Click the popup box to confirm the update to the current time.
UPS Warranty time (year)	3	1 ~ 50	Set according to the actual UPS warranty time for the users.
UPS Expire time	2021-01-01 00:00:00	Not settable	The warranty expiration time is automatically generated according to installation time and warranty time. When the system time exceeds the warranty period, the status bar of home page will prompt the warranty information.

5 Operation

5.1 Operation of Single UPS System

5.1.1 Turn On the UPS

	CAUTION
⚠	• Ensure that all switches on the UPS are disconnected before wiring on site. • Check whether all screws are tightened and all wiring is correct before turning on the UPS. • Disconnect the mains input circuit breaker, bypass input breaker, output breaker and battery breaker. • After power on, first make sure that *"Number of basic modules"* in the *"Advanced"* of *"Setting"* interface is consistent with the number of modules actually used. • According to load requirement, make sure to set "*Output voltage(V)*" and "*Output frequency(Hz)*" properly in the "*Settings*" interface before starting up. • For long time model UPS, make sure to set *"Battery type"*, "*Battery capacity(Ah)*", "*Number of cells*" and "*Battery string*" in the battery parameters interface before starting up. Ensure that configured parameters must be matched with the connected battery string.

Operation procedures:

Step 1: Close the external input distribution switch (mains input breaker and bypass input breaker) to power on the system while the system will start initialization, the company's LOGO and initialization progress bar will be displayed on the monitor screen. In this case, the system is in standby mode.

Step 2: After the monitoring is started normally, if the equipment is powered on for the first time, the relevant parameters can be set through quick setting guidelines; when powering on again, the system defaults to the previous setting. If these parameters are already set, the system defaults to the existing settings. Please refer to the quick settings in 4.2.1 for specific operation interface.

Step 3: After the quick settings is completed, if there is no abnormal alarm on the display interface, continue to perform the following steps; If there is an abnormal alarm on the display interface (at this time, because the battery has not been connected, it is a normal alarm to report "battery not connected"), reset all abnormal alarms.

Step 4: Start the inverter.

If "*Control*" is gray and not selectable on the main menu of the monitoring display unit, unlocking is required first. Click the password lock in the upper right corner of the display interface while the system will pop up the unlocking window, and enter the password, as shown in Fig. 5-1.

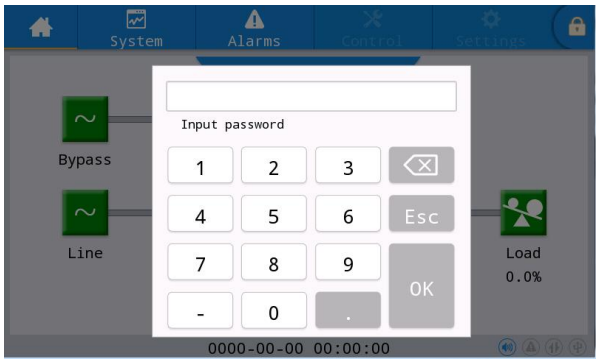

Fig. 5-1 Unlocking window

Select “*Control*” in the main menu of the monitoring display unit, click “*Inv.On*”, and complete the inverter starting operation after selecting “*OK*”, as shown in Fig. 5-2.

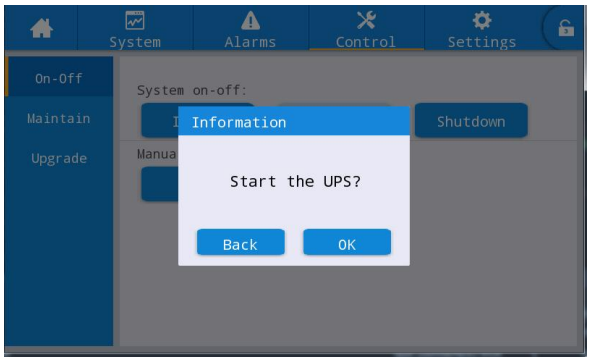

Fig. 5-2 Startup

Step 5: After the inverter startup, UPS switches to the inverter power supply, and the system operation status diagram can be checked to confirm whether the system is powered by the main inverter.

The real-time data displayed “*System*” → “*Output*” in the display interface can be used to confirm whether the three-phase output voltage and frequency of UPS are normal, and a multimeter can be used to test whether the effective value and frequency of the three-phase output voltage are normal, as shown in Fig. 5-3.

Fig. 5-3 Output information

Step 6: Check whether the actual number of battery strings is consistent with the number of single batteries set on the monitoring display interface; measure by the multimeter whether the absolute value of the positive battery voltage and the negative battery voltage are greater than a certain value (for 12V battery, 11.4v × number of batteries), to prove the normal connection of the battery. After confirming the connection of the battery string, close the input breaker of the battery strings (if there are multiple batteries, close the breaker of each battery string first, and then close the master switch between the battery string and UPS). The batteries self-check to confirm whether the battery works normally.

Step 7: Close the external output distribution switch to supply power to the load.

Note

- If the UPS has been powered on or is in the bypass power supply mode, and it is required to change to the inverter power supply mode, just confirm that there is no abnormal alarm at present and then execute step 4; if UPS is fully powered off, complete all of the above steps.

5.1.2 Turn Off the UPS

	CAUTION
⚠	• When "*Shut to bypass*" is selected, if the system bypass is normal, after UPS inverter is powered off, the system will enter the bypass power supply mode; if the system bypass is abnormal, the inverter will be shut down and the system will enter no-output mode. • When "*Shutdown*" is selected, the system directly enters the no-output mode after the inverter is powered off, and the system output is closed. • Before shutdown, please confirm that the user's equipment (i.e., UPS load) has been shut down and can withstand power failure at any time.

Operation procedures:

Step 1: Turn off the inverter.

If "*Control*" is gray and not selectable on the main menu of the monitoring display unit, unlocking is required first. Click the password lock in the upper right corner of the display interface while the system will pop up the unlocking window, and enter the password, as shown in Fig. 5-1.

Select "*Control*" in the main menu of the display unit, click "*Shut to bypass*", and after selection and confirmation, complete the operation of turning off the inverter, as shown in Fig. 5-4.

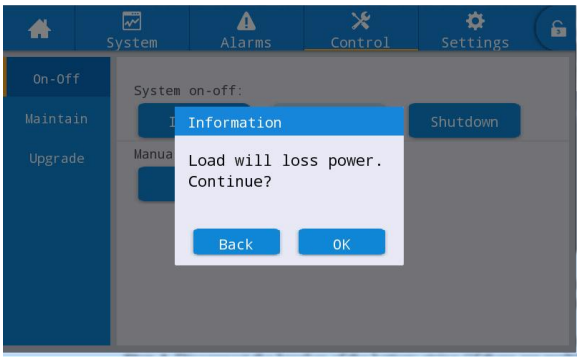

Fig. 5-4 Turn off inverter

Step 2: After the inverter is powered off, if the system bypass is normal, UPS enters the bypass power supply mode. If the system bypass is abnormal, UPS will enter no-output mode after inverter is powered off, resulting in power failure of load.

Step 3: After the inverter is powered off, power off the external output distribution switch.

Step 4: Disconnect the breaker of the battery string (if there are multiple batteries, first disconnect the master switch between the battery strings and UPS, then disconnect the breaker of each battery string).

Step 5: Disconnect the external mains input distribution switch and the bypass input distribution switch.

Note

- If it is only required to power off the UPS inverter and supply the power by the system bypass, after confirming that UPS has no abnormal alarm at present, it is only required to execute step 1; if it required to fully power off UPS, all of the above steps should be performed.

5.1.3 Battery Cold Start

Operation procedures:

Step 1: Confirm that the battery is connected properly, and measure by the multimeter whether the absolute value of the positive battery voltage and the negative battery voltage are greater than a certain value (for 12V battery, 11.4 V× number of batteries).

Step 2: Disconnect the input breaker of the external mains circuit and bypass, and close the battery breaker in case of no input of the mains and the bypass (if there are multiple batteries, close the breaker of each battery string first, and then close the master switch between the battery string and UPS).

Step 3: Measure the voltage of the positive and negative battery strings connected to the input terminal of UPS battery by the multimeter. If the absolute value of the positive battery string voltage and negative battery string voltage is greater than a certain value (for 12V battery, 11.4 V × number of batteries), the battery is connected normally.

Step 4: Press the battery cold start button on the equipment for more than 3 seconds. The position of the battery cold start button is shown in Fig. 2-8 or Fig. 2-11. The system will automatically enter the battery cold start state while both the company's LOGO and the initialization bar are displayed on in the monitoring display unit.

Step 5: After the initialization of the monitoring display unit is completed, refer to Step 3, Step 5 and Step 6 in "**5.1.1 Turn On the UPS**" to turn on the inverter.

5.1.4 Transfer to Bypass Operation by Manual

	CAUTION
⚠	• Before manual change to bypass, confirm that the bypass is normal. If the bypass is abnormal, manual change to bypass will be invalid and the previous state will be retained. • In the bypass power supply mode, when the input voltage or frequency range exceeds the setting value of the system, it is possible to cause no output of the system and power failure of the load.

Operation procedures:

If "*Control*" is gray and not selectable on the main menu of the monitoring display unit, unlocking is required first. Click the password lock in the upper right corner of the display interface while the system will pop up the unlocking window, and enter the password, as shown in Fig. 5-1.

Select "*Control*" on the main menu of the monitoring display unit, click "*Manual to bypass*", and after selection and confirmation, complete "*Manual to bypass*" Power Supply Mode, as shown Fig. 5-5.

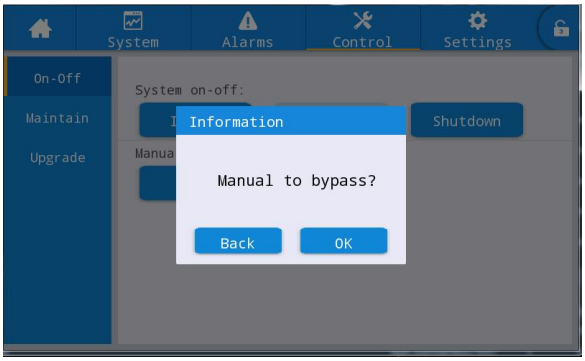

Fig. 5-5 Manual to bypass

5.1.5 Transfer to Maintenance Bypass

	CAUTION
⚠	• Transferring to maintenance bypass operation must be performed in strict accordance with the following steps, otherwise it is possible to cause the power failure of the load. • In the maintenance bypass mode, the load is powered from mains supply via the maintenance bypass. If the mains supply is abnormal, the load may be cut off.

Step 1: Refer to the operation steps in 5.1.4, manually transfer UPS to the bypass power supply mode.

Step 2: Remove the fixing parts of the maintenance bypass switch first, then connect the maintenance bypass switch. Manually connect the UPS maintenance bypass switch, and the UPS system is converted to the maintenance bypass mode; Monitoring display interface shows "maintenance breaker connected" alarm.

Step 3: Disconnect switches of input, bypass, battery and output. The UPS system enter maintenance bypass mode.

5.1.6 Power Supply Restored from Maintenance Bypass to Inverter

	CAUTION
⚠	• Before recovery of power supply from maintenance bypass to inverter, confirm that the bypass input and output of the system are normal.

Operation procedures:

Step 1: Connect the input switch and bypass switch of the UPS system, The power supply of the UPS system is normal. Manually start up the UPS, and the monitoring display interface shows "maintenance breaker connected" alarm. At this time, "Manual Bypass" is automatically turned on, and the system operation status diagram in the monitoring display interface can be checked to confirm whether the system has changed into the bypass power supply mode. It is forbidden to connect the output breaker in advance, otherwise the bypass SCR short-circuit fault will be reported.

Step 2: Connect the battery switch and output switch, manually switch the maintenance bypass switch from the "ON" connected state to the "OFF" disconnected state, at this time the maintenance bypass switch is disconnected. At this time, the monitoring display interface"maintenance breaker connected" alarm disappears.

Step 3: Click "Manual bypass" to close, close the manual bypass, and the system will resume normal work. The system operation status diagram in the monitoring display interface can be viewed to confirm whether the system is converted to inverter power supply mode.

5.1.7 Emergency Power Off (EPO)

	CAUTION
⚠	• By default, the operation of EPO will not cause the UPS output power to turn off, and make the UPS switch to bypass output to prevent accidental power outages. If the UPS is required to have no output directly, need to set “EPO action” as “Shutdown”. • After pressing the "*EPO*" button, it may cause no output for the UPS and power failure for the loads.

Operation procedures:

Unplug the dry contact connector at the normally closed end interface of EPO or close the external EPO switch connected with the dry contact while UPS will enter the state of emergency shutdown. At this time, the monitoring display screen gives an alarm.

5.1.8 EPO Recovery

Operation procedures:

Step 1: Plug in the dry contact connector at the normally closed interface of EPO or disconnect the EPO switch connected with the dry contact, and confirm that the EPO switch connected with the dry contact is not in the emergency shutdown state.

Step 2: Clear EPO alarm in the system.

Select “*Control*” → “*maintain*” → “*Clear fault*” in the main menu of the monitoring display unit, and select "*OK*" in the popup prompt dialog to clear the EPO alarm, as shown in figure 5-6.

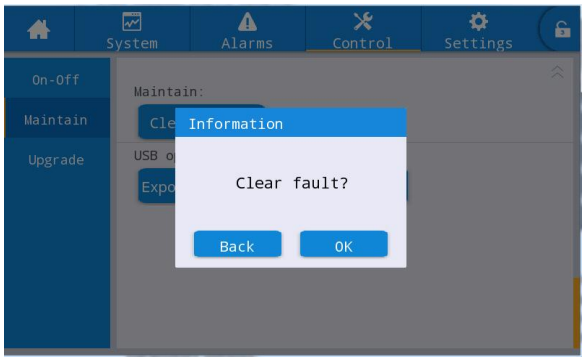

Fig. 5-6 Fault clearance

Step 3: Check the current alarm and confirm that the "*EPO*" alarm disappears. If the system bypass input is normal, UPS will switch to the bypass power supply mode.

Step 4: Turn on the inverter, referring to “**5.1.1 Turn On the UPS**”.**5.1.9**

5.1.9 Firmware Upgrade

	CAUTION
⚠	• During firmware upgrade operation, it may switch to the maintenance bypass mode to supply power. It may result in power failure of the load when mains power is abnormal. • USB flash disk and firmware upgrade program are required for the upgrade operation. Please prepare them in advance.

Upgrade of monitoring and main control firmware

Operation procedures:

Step 1: Copy the firmware package in the root directory of the U disk, such as U disk:\ITEPKG03.PKG.

Step 2: Switch the working unit to the maintenance bypass power mode, refer to **5.1.5**, or switch to standby mode which does not need power output.

Step 3: Insert the USB flash disk into the USB interface of the monitoring board and wait for the USB icon in the lower right corner of the home page becoming lit.

Step 4: Click the unlock icon and enter the advanced password.

Step 5: Access "*Control*" → "*Upgrade*" interface, click "*Import firmw.*", and wait unit it is imported successfully after confirmation.

Step 6: Check whether the chip, current version and new firmware version are correct.

Step 7: Click the upgrade button on the right side of one of the chips to upgrade the corresponding module. During upgrading, after the corresponding chip is restarted automatically and displayed, and then the next chip may be upgraded. Complete the upgrade in sequence.

Step 8: After upgrading of monitoring firmware, the monitor will be restarted automatically. It is required to exit the firmware upgrading page manually while all firmware information is displayed.

Step 9: Restore power supply from the maintenance bypass to the inverter and start the UPS inverter, refer to Step 2 ~ Step 6 in **"5.1.1 Turn On the UPS"**.

Bypass Board Program Upgrade

The operation process is as follows:

Step 1: Copy the firmware package in the root directory of the U disk, such as U disk:\ITEPKG03.PKG.

Step 2: Turn the UPS into inverter output mode, or in standby mode when power output is not needed.

Step 3: Insert the U disk into the USB interface of the monitoring board, and check to wait for the USB icon in the lower right corner of the home page to light up.

Step 4: Click the unlock icon and enter the maintenance password.

Step 5: Enter the [Control]➞[Firmware Upgrade] interface, click [Import Firmware], wait for the successful import after confirmation;

Step 6: Check whether the chip, current version and new firmware version are correct;

Step 7: Click the bypass module program upgrade button to upgrade the bypass module program. When upgrading, you need to wait for the corresponding chip to automatically restart and refresh the display again. After confirming that it is correct, the UPS will work normally.

Display HMI Firmware Upgrade

The operation process is as follows:

Step 1: Copy the firmware package in the root directory of the U disk, such as U disk:\ITEPKG03.PKG。

Step 2: Insert the U disk into the USB interface of the display.

Step 3: Click the reset button on the left side of the back cover of the display to restart the display.

Step 4: Check whether there is a series of percentage burning progress on the display screen, if there is, wait for burning to complete, if not, the firmware reads fail or U disk recognition fail. Please check whether the firmware is properly placed in the U disk or replace other normal U disks and try again.

Step 5: When the display is finished (the words "IMFO: Upgrade Finished" appear), then pull out the U disk, click the button on the back of the display to restart the display or power on again.

Step 6: Enter the display page [system]➞[about] to check whether the "display version" has been updated successfully.

5.2 Operation of Parallel UPS System

5.2.1 Start Up Parallel System

	CAUTION
⚠	• Ensure that all switches on the UPS are disconnected before wiring and installation. • Before starting, check whether the wiring of the parallel system is correct and fully connected, all screws are tightened.

Step 1: Building of Parallel UPS system

For the parallel UPS system, please refer to "**3.3 Installation of Parallel UPS System**" to connect the power cables and control cables. If the batteries are independent, they can be wired separately.

Step 2: Wiring confirmation

Use a multimeter to reconfirm that all wiring is correct.

Step 3: Single unit commissioning

After the wiring is OK, confirm that the output switch of all UPSs is disconnected and the output switch of the system is also disconnected. Debug each UPS in the parallel system one by one. Please refer to the chapter "5.1 Single Machine Operation" for the debugging operation process of single UPS. Record the output voltage of the single UPS, confirm whether there is any abnormality, shut down and power off after confirming, and disconnect all the input, output, battery and bypass switches of the single unit.

Step 4: Check the output voltage of each single unit

After debugging each single unit and confirming their parameters, restart them and compare the output voltage of each UPS, confirm that the effective value difference of phase voltage corresponding to the three phases of any two UPSs is less than 2 V, then they can be connected in parallel. If the condition is not met, UPSs with large voltage deviation cannot be connected in the parallel system, fine tune the output voltage of them are required. For UPSs with large deviation, sampling and calibration should be performed again to ensure that the effective value difference of phase voltage corresponding to the three phases of other UPSs is less than 2V.

Step 5: Confirm software version

Ensure that all the bypass breakers, output breakers and battery breakers of all UPS units are disconnected, and close the input breakers of all UPS units, then verify the program version of the UPS which needs to be connected in parallel. Enter the "*About*" interface in the system menu, verify the "*HMI version*", "*MCU version*", "*Bypass version*", "*PFC1 version*" and "*Inv.1 version*", and ensure that the program version of each part is consistent.

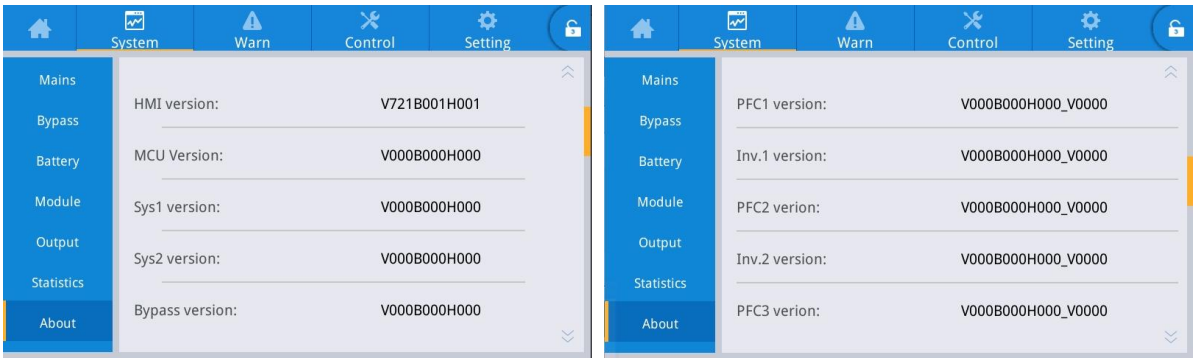

Fig. 5-7 About interface

Step 6: Confirm parameters

For single UPS units which need to be connected in parallel, their advanced parameters, input parameters, output parameters, bypass parameters and battery parameters (Be consistent when "*Battery string mode*" is set as "*Share*", and specific settings are performed according to the battery configuration of each unit when it is set as "*Separate*") in the setting interface should be kept consistent. Please refer to "**4.2.6 Settings**" for parameters settings

Step 7: Check phase sequence of the bypass (Each UPS output breaker is disconnected, and the system output breaker is disconnected)

Turn on each unit and switch them to bypass mode, close the output breaker of UPS 1# (ensure that the master switch for loads is disconnected, otherwise UPS 1# will supply power to loads after its output breaker being closed) and keep output breakers of other UPSs disconnected. Make a multimeter on AC voltage, a pen connected to the A phase at front end of the output breaker of UPS 2#, and the other pen connected to the A phase at back end of the output breaker of UPS 2#, measure the voltage difference between front and back end of the output breaker of UPS 2#, and measure B and C phase in the same way. If the phase sequence is correct, the voltage difference of each phase is less than 5 V; If the phase sequence is incorrect, at least one phase voltage difference is more than 5 V. Use same method to test whether the bypass phase sequence of each UPS which needs to be connected in parallel is correct (when testing the phase sequence of other UPSs, there is no need to operate breakers again. Keep the output breaker of UPS 1# closed while output breakers of other UPSs are disconnected). If the bypass phase sequence of all UPSs are correct, proceed to the next step; If there is phase sequence incorrect from any one of UPS, need to power down the system and check whether the bypass input/output wiring of each UPS is correct or not. After confirmation, turn off each UPS and cut off the output.

Step 8: Parallel parameter setting (All UPSs are in shutdown output state）

1.Set the [Single/Parallel] option in the basic parameter settings of the setting interface to [Parallel].

2.Set 1, 2, 3 and 4 in turn in the [cabinet number] of the setting interface of basic parameters. The parallel operation of at most 4 UPSs is supported, as shown in Figure 5-8.

3.Set the number of UPS in the parallel system in [number of system stands] of the advanced parameter setting of the setting interface, as shown in Fig. 5-8.

4. Set one UPS of the parallel system as mast and other UPS as the slave in the [rack master-slave setup] of the advanced parameter settings in the settings interface. The master-slave refers to the communication master-slave of the rack, that is to say, one UPS is the host for monitoring communication, and the other UPS are the slave for monitoring communication. The parameters of other UPS can be set on the communication host, and the slave automatically synchronizes the parameters of the master (for the independent battery pack, the battery parameters will not be synchronized), as shown in Fig. 5-8.

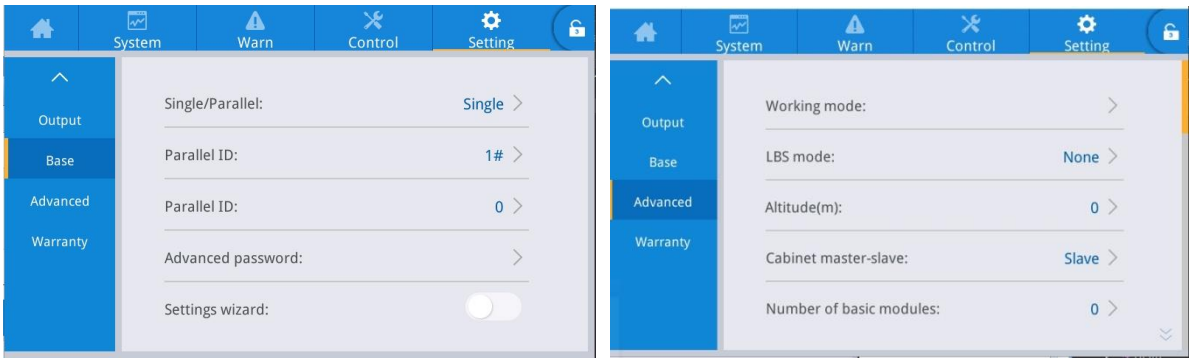

Fig.5-8 Parallel parameter setting interface

5.Unified system on/off is enabled. If you need to set the parallel power on/off of the parallel system, you can set the [Unified System On/Off] option in the advanced parameter settings of the setting interface, as shown in Figure 5-9.

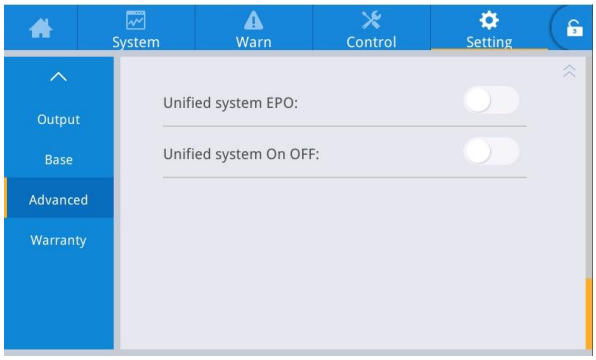

Fig.5-9 Unified System On/Off setting interface

Step 9: Confirm parallel signal

After setting as "*parallel*", if the parallel communication cable is not connected, it will report the fault of "Parallel line abnormal". It is necessary to confirm that no such fault occurs on each UPS in parallel system. If the fault is reported again, need to check whether the parallel communication cables are connected properly or not.

Step 10: Start up parallel system

Confirm that the system only operates on the main circuit and the bypass, and close the output breakers of all UPS units, and then directly click "*Inv.On*". The startup operation is consistent with the startup operation of the single UPS (only need to operate any one of parallel UPS units).

Step 11: Add battery strings

View monitoring and confirm that each UPS unit has switched to the inverter mode. After the system output is normal, add battery strings and close the battery breaker. If the parallel UPS system uses separated battery strings, close the battery breaker of each UPS unit separately. "Battery disconnected" of each UPS unit disappears within 3 min after closing. Make sure the batteries are connected properly.

Step 12: Switching test

Disconnect the master input breaker and confirm that all UPS units switch to battery mode normally, which can be observed through monitoring.

Close the input breaker, then manually turn off the UPS unit which switches to bypass, and then check whether all the UPS units switch to the bypass mode normally, which can be observed through monitoring.

Step 13: Close the output breaker of the system

After the system switching to bypass, close the system output breaker, make the bypass carry with loads, then turn on the UPS which switches to the inverter mode normally, so the whole parallel system startup process is completed.

5.2.2 Shut Down Parallel System

Operation procedures:

Step 1: Turn off all loads.

Step 2: If the unified system On/Off is enabled, the entire parallel system can be shut down by operating any machine panel. If no enable is set, you need to operate the panel-by-panel for shutdown.

Step 3: After doing step 2 for about 5 min, disconnect the system output breaker, output breakers of each UPS, battery breakers, bypass input breaker and mains input circuit in turn, so the parallel system shutdown is completed.

5.2.3 EPO

If unified EPO action is set, one machine conducts EPO, and so does the entire parallel system. If it is not set, only the single machine responds to EPO.

5.2.4 Single UPS Unit Exit the Parallel System

Operation procedures:

Step 1: After failure of a single UPS, its output will be cut off automatically, and it will exit from the parallel system. The system will be continuously powered by other UPSs.

Step 2: Disconnect the output breaker on the output distribution cabinet of the failed UPS or the external output distribution breaker.

Step 3: Confirm in turn: the output voltage of the stand-alone, software version, parameters, and bypass phase sequence. For specific steps, refer to step 4 to step 7 of 5.2.1. After confirming that they are correct, shut down and cut off the output.

Step 4: Reconnect the parallel cable, set the parallel parameters, and confirm the parallel signal. Refer to step 9 and step 10 of 5.2.1.

Step 5: Connect all the switches of the newly added machine, and then click the “start” button on the panel, the machine is turned on and added into the parallel system.

5.2.5 Add a Single UPS to the Parallel System

Operation procedures:

Step 1: After maintenance of the single UPS is completed, disconnect the parallel cables before power on. The “*Single/Parallel”* option in the “Base” parameters setting interface is set as "Single ".

Step 2: Power on to make sampling correction and single unit commissioning again, ensure that the output breaker is disconnected during this process. For the single unit commissioning operation, please refer to “**5.1 Operation of Single UPS System**”.

Step 3: Confirm in turn: check the output voltage, software version, parameters, bypass phase sequence of the single UPS. The specific procedures are the same as those in Step 4 to 7 in **5.2.1**.

Step 4: Reconnect the parallel cables, set parallel parameters and confirm the parallel signal. Refer to Step 9 and Step 10 in **5.2.1**.

Step 5: Switch the parallel system without adding the maintained single UPS to bypass mode manually, close all switches of the newly added UPS, and then start up the system.

6 Maintenance

6.1 UPS Maintenance

6.1.1 Monthly Maintenance

- Check the operating conditions of the equipment, including ambient temperature, humidity, input/output voltage, frequency, load type, load rate, various alarm information, etc.
- Check UPS for abnormal sound. If there is any abnormal sound, continue to check for the source of abnormal sound, mainly including fan, input/output transformer (skip if not configured), power unit and bypass unit. If the cause is not identified, contact the supplier in time.
- Check whether the input and output terminals of the equipment are firm, the connecting cables are intact, aged or damaged. If damaged, analyze reasons for the damage, and pay special attention to rat control.
- Check the UPS monitoring panel, and confirm that all graphic display units on the monitoring panel are in normal operation status, and all operating parameters of the power supply are within the normal range, and no failure or alarm information is found in the display record.
- Dust and clean the equipment if needed.
- Check whether there is any change in the load carried by UPS and periodically check and record the increase and decrease of load.
- Check and record the operating environment temperature and humidity of UPS.
- Check whether the parameter configuration of UPS is correct.
- Fill in UPS maintenance report form, sort and treat abnormal situation and alarm.
- Export and analyze alarm information from the system, and output the alarm analysis report.

6.1.2 Quarterly Maintenance

Repeat monthly inspection.

- Conduct a thorough dust removal and cleaning for UPS, paying special attention to the cleaning of dust accumulating at fans and inlet and outlet.
- Inspect whether input/output cables and terminals are aged, damaged, burned and loose, and reinforce all input/output terminals.
- if conditions permit, it is necessary to inspect key internal components of UPS, mainly including the following components:
- Electrolytic capacitor: check for leakage, roof caving and expansion.
- Transformers and inductors: check for overheating, discoloration and delamination.
- Cable and cable arrangement: check whether sheath of the connecting cable is damaged, cracked and scraped, reinforce all power cable connection terminals, and check whether the cables are firmly installed between boards.
- Fuses: check that all fuses are in good condition and installed securely.
- Printed circuit board: check the cleanliness of printed circuit board and the integrity of the circuit, pay attention to check whether there is overheating, discoloration, the circuit board components are intact without damage and corrosion.
- If there is an input/output transformer, check whether the transformer has overheating, discoloration, delamination and falling off, prevent turn-to-turn short circuit, and check whether the connection terminal is firm, rusted or corroded.

- Check by the multimeter and the clip-on ammeter whether input, output, battery, load voltage and current are consistent with those required by system requirements and displayed in the LCD display.

6.1.3 Annual Maintenance

Repeat all quarterly maintenance and inspections.

In order to prevent system failure resulting from the working wear and tear of components, it is recommended to regularly inspect the key components used in the UPS system, and replace them within their expected life span. The life parameters and recommended replacement time of key devices are shown in Table 6-1.

Table 6-1 Recommended replacement time of key devices

Key components	Recommended replacement period	Recommended inspection period
Electrolytic capacitor	5 - 6 years	One year
Fan	5 - 6 years	One year
Lead-acid battery	3 - 4 years	6 months

6.2 Battery Maintenance

The following battery maintenance considerations are only maintenance recommendations for a general lead acid battery. Please refer to the battery maintenance instructions shipped with the battery for details.

CAUTION

- Battery replacement and maintenance shall only be performed by authorized qualified personnel.
- During the battery maintenance, it is required to insulate the tool (wrench, etc.) first.
- Disconnect all power supply before connecting or disconnecting the terminals.
- Do not smoke or use open fire near the battery string.
- Fully charge the battery within 24h after discharging, so as not to affect the battery life.
- In case of no power failure in a power grid environment for a long time, the battery should be discharged every 3 to 6 months and then recharged to extend the battery life.
- Regularly measure the voltage of the battery string and each single battery to ensure the voltage balance of each single battery. If the voltage of the single is too low, replace the corresponding battery.

7 Troubleshooting

Use the table below to solve minor installation and operation problems.

No.	Problems	Possible cause	Solution
1	Rectifier starting failed	Input AC voltage out of standard	Verify that the input distribution voltage is abnormal
		Abnormal phase sequence of UPS three phase input	Check whether the phase sequence of UPS three-phase input is correct.
		Power unit failed	Replace the power unit
2	Inverter failure, UPS changing to bypass power supply mode	Output overload or short circuit protection	Reduce load or remove load short circuit fault
		UPS overheating protection	Install air conditioning or ventilation facilities in the machine room to ensure the normal temperature of the machine room
		Power unit failed	Replace the power unit
3	DC system abnormal and failure to operate normally in battery mode	Battery undervoltage or failed	Replace the battery
		Failure to connect the battery cable as required, or poor contact of wiring terminals or battery breaker not closed	Eliminate battery wiring problems and make sure the battery breaker closed
		Power unit failed	Replace the power unit
4	System works in the bypass and failing to change to the invert mode	Set to ECO mode	Set the correct working mode
		Bypasses switching times reaches maximum	Set the appropriate bypass switching times in the setting interface; or clear the fault in the control interface
		Inverter failed	Refer to above No. 2
5	Indicator light of power unit illuminates red	Abnormal AC input and battery input	Confirm whether the input cables and cables are loose and the distribution is abnormal
		Power unit failed	Replace the power unit

Note

- If components replacement is required for the above troubleshooting and involved in Appendix C alarm list, please consult with the supplier.

8 Technical Parameters

MODEL	EA6680	EA66160
Rated capacity	80 kVA / 80 kW	160 kVA / 160 kW
Number of power module	4	8
Rated capacity of power module	20 kVA / 20 kW	
MODEL	**EA66100**	**EA66200**
Rated capacity	100 kVA / 100 kW	200 kVA / 200 kW
Number of power module	4	8
Rated capacity of power module	25 kVA / 25 kW	
MODEL	**EA66120**	**EA66180**
Rated capacity	120 kVA / 120 kW	180 kVA / 180 kW
Number of power module	4	6
Rated capacity of power module	30 kVA / 30 kW	
INPUT		
Input wiring	Three-phase five-wire (3Φ + N + PE)	
Rated voltage	380 / 400 / 415 Vac	
Voltage range	138 ~ 305 Vac (linear derating at 40% ~ 100% load), 305 ~ 485 Vac (no derating)	
Frequency range	40 ~ 70 Hz	
Input power factor	≥ 0.99	
Bypass input voltage range	-60% ~ +25% (settable)	
Battery voltage	Lead-acid battery: ± 240 Vdc (±180 ~ ± 276 Vdc settable), 40 pcs 12 V batteries (30, 32, 34, 36, 38, 40 42, 44, 46 pcs settable) lithium battery: ±256VDC (±192VDC~±256VDC settable), 160 pcs 3.2V batteries（120、128、150、160 pcs settable）	
OUTPUT		
Output wiring	Three-phase five-wire (3Φ + N + PE)	
Rated voltage	380 / 400 / 415 Vac	
Output voltage regulation accuracy	± 1%	
Output frequency accuracy	Synchronized with utility in mains power mode; 50 Hz / 60 Hz ± 0.1% in battery mode	
Output power factor	1	

Crest factor	3:1	
Overload capacity	105% < load ≤ 110% for 60 min, 110% < load ≤ 125% for 10 min, 125% < load ≤ 150% for 1 min, load > 150% for 0.2 s	
SYSTEM		
Transfer time	Main mode - battery mode: 0ms	
Max. number of parallel connections	2	
Protections	Output short circuit protection, output overload protection, over temperature protection, battery low voltage protection, output over and under voltage protection, fan fault protection, etc.	
Communications	Standard: RS485, CAN, NET (including SNMP function), Dry contact interface, EPO; Option: Parallel components, LBS components,WIFI module, 4G module, battery temperature sensor	
Display	7 inches LCD touch screen	
ENVIRONMENTAL		
Operating temperature	0 ~ 40℃	
Storage temperature	-25℃ ~ 55℃ (without battery)	
Relative humidity	0% ~ 95% (non-condensing)	
Altitude	≤ 1000 m, above 1000 m, derating 1% for each additional 100 m	
IP rating	IP 20	
OTHERS		
Cabinet dimensions (W x D x H) (mm)	600 × 850 × 1200	600 × 850 × 2000
Net weight of rack（kg）	180	280
Module dimensions (W x D x H) (mm)	482×620×86	
Net weight of power module（kg）	21	
Color	Black	
STANDARDS		
Safety	IEC 62040-1, GB7260.1-2008, GB7260.4-2008	
EMC	IEC 62040-2, IEC61000-4-2 (ESD), IEC61000-4-3 (RS), IEC61000-4-4 (EFT), IEC61000-4-5 (Surge)	

Appendix 1 Display Menu

Level 1 menu	Level 2 menu	Level 3 menu	Level 4 menu	
Homepage				
System	Input	Voltage(V)		
		Current(A)		
		Frequency(Hz)		
	Bypass	Voltage(V)		
		Current(A)		
		Frequency(Hz)		
	Battery	The system battery information	Battery voltage(V)	
			Battery Current(A)	
			Battery status	
			SOH(%)	
			Backup time(min)	
			Temperature(℃)	
			Remaining cap.(%)	
		Lithium battery string information(#)	Input volt.(V)	
			Input curr.(A)	
			Max. cell voltage (mV)	
			Min. cell voltage (mV)	
			Max. cell temperature (˚C)	
			Min. cell temperature (˚C)	
			Battery pack n information(#)	Max. pack temperature (℃)
				Min. pack temperature (℃)
				Cell voltage 1(mV)
				Cell voltage 2(mV)
				Cell voltage 3(mV)
				Cell voltage 4(mV)

Level 1 menu	Level 2 menu	Level 3 menu	Level 4 menu	
				Cell voltage 5(mV)
				Cell voltage 6(mV)
				Cell voltage 7(mV)
				Cell voltage 8(mV)
				Cell voltage 9(mV)
				Cell voltage 10(mV)
				Cell voltage 11(mV)
				Cell voltage 12(mV)
				Cell voltage 13(mV)
				Cell voltage 14(mV)
				Cell voltage 15(mV)
				Cell voltage 16(mV)
				Cell voltage 17(mV)
				Cell voltage 18(mV)
				Cell voltage 19(mV)
				Cell voltage 20(mV)
	Module (#)	Input volt. (V)		
		Input curr. (A)		
		Input freq. (Hz)		
		In.act. pow. (kW)		
		In.appa. pow. (kVA)		
		Input pow. factor		
		Output volt. (V)		
		Output curr. (A)		
		Output freq. (Hz)		
		Out. act. pow. (kW)		
		Out. appa. pow (kVA)		
		Out. reac. pow (kVa)		
		Out. pow. factor		
		PFC power supply mode		
		OUT power supply mode		
		Charge voltage (V)		
		Charge current (A)		
	Output	Voltage(V)		
		Current(A)		
		Frequency(Hz)		
		Load ratio(%)		
		Active power(kW)		

Level 1 menu	Level 2 menu	Level 3 menu	Level 4 menu	
		Appa. pow.(kVA)		
	Statistics	Bypass runtime(min)		
		Inv. runtime(min)		
		Last discharge		
		Batt.expire time		
		UPS expire time		
		Ambient temperature (℃)		
	About	S/N		
		Parallel ID		
		TEL		
		Manufacturer		
		Website		
		HMI version		
		MCU version		
		Bypass version		
		PFC1 version		
		Inv.1 version		
		PFC2 version		
		Inv.2 version		
		PFC3 version		
		Inv.3 version		
		PFC4 version		
		Inv.4 version		
		PFC5 version		
		Inv.5 version		
		PFC6 version		
		Inv.6 version		
		PFC7 version		
		Inv.7 version		
		PFC8 version		
		Inv.8 version		
Alarms	Active alarm			
	History records	Fault record		
		Status record		
		Operating record		
Control	On-Off	System on-off	Inv.On	
			Shut to bypass	

Level 1 menu	Level 2 menu	Level 3 menu	Level 4 menu	
		Manual to bypass	On	Shutdown
	Maintain	UPM on-off	UPM1 on	Off
			UPM2 on	UPM1 off
			UPM3 on	UPM2 off
			UPM4 on	UPM3 off
			UPM5 on	UPM4 off
			UPM6 on	UPM5 off
			UPM7 on	UPM6 off
			UPM8 on	UPM7off
		Charger on-off	Chg.1 on	UPM8 off
			Chg.2 on	Chg.1 off
			Chg.3 on	Chg.2 off
			Chg.4 on	Chg.3 off
			Chg.5 on	Chg.4 off
			Chg.6 on	Chg.5 off
			Chg.7 on	Chg.6 off
			Chg.8 on	Chg.7 off
		Equalized-float charging	Forced equ.	Chg.8 off
			Cancel equ.flo.	Forced float
		Self-check	By time	
			SOH calibrate	By voltage
		Maintain	Recover factory	Cancel check
			Clear record	Mute
		USB operations	Export history	Clear faults
	Upgrade	Import firmw.		Import logo
Settings	Common	Language		
		YYYY-MM-DD		
		Time		
		Date format		
		Brightness		
		Auto-lock		
		User password		
		Remote control		
	Communication	Serial port	Protocol	
			Address	Baud rate
		Network	I P address allocation	Parity

Level 1 menu	Level 2 menu	Level 3 menu	Level 4 menu	
			Subnet mask	IP address
		Battery BMS	Battery brand	
			Communication type	
	Dry contacts	Input dry contacts	DI_1	
			DI_2	
		Output dry contacts	DO_1	
			DO_2	
			DO_3	
			DO_4	
			DO_5	
			DO_6	
	Bypass	ECO voltage range (%)		
		ECO freq.range (Hz)		
		Max.bypass voltage (%)		
		Min.bypass voltage (%)		
		Bypass freq.range (Hz)		
	Input	Intra-rack pow.mdl.start.delay (s)		
		Inter-rack pow.mdl.start.delay (s)		
		PFC soft-startup time (s)		
		Input cur. limiting		
		Input cur.limiting ratio (%)		
		Input adaptability		
	Battery	Battery type		
		Battery capacity (Ah)		
		Number of cells		
		Battery string		
		Battery string sharing mode		
		Battery auto self-check		
		Start to auto self-check		
		Stop to auto self-check		
		Constant cur. equ. chg. time (h)		
		Max. batt. dis. time (h)		
		Auto self-check period (d)		
		Self-check time (h)		
		Self-check under volt. (V/cell)		
		Backup time warning		

Level 1 menu	Level 2 menu	Level 3 menu	Level 4 menu	
		Backup time warn. thresh. (min)		
		Remain. cap. warning		
		Remain. cap. warning thresh. (%)		
		SOH(%)		
		Chg. cur. limiting coef. (C10)		
		Cell float voltage（V/cell）		
		Cell equalized volt.（V/cell）		
		Batt. high temp. alarm (℃)		
		Batt. low temp. alarm (℃)		
		Equ. chg. protect. interval (d)		
		Scheduled equ. chg. interval (d)		
		Float volt. temp. comp.		
		Flo. volt. temp. comp.coef.(mV/℃-cell)		
		Dis. cur. 1 EOD(V/cell)		
		Dis. cur. 2 EOD(V/cell)		
		Battery unlock time (min)		
		Cell EOD volt. warn. increment (V)		
		Constant volt. equ. chg. time (h)		
		Transferir para flut. corr. coef.(C10)		
		Transfer-to-equ.SOC(%)		
		Battery pack		
		Number of pack cells		
		Limit bms charge curr.		
		Limit bms charge volt.		
		Limit bms charge power		
		Limit bms discharge curr.		
		Limit bms discharge volt.		
		Limit bms discharge power		
	Output	Self-load output cur. ratio (%)		
		Bypass transfer times		
		Output voltage (V)		
		Output frequency (Hz)		

Level 1 menu	Level 2 menu	Level 3 menu	Level 4 menu	
		Output volt. adjustment (V)		
		Output freq. track rate (Hz/s)		
	Base	Single/Parallel		
		Parallel ID		
		Number of system frames		
		Advanced password		
		Settings wizard		
		Set language limit		
	Advanced	Operating mode		
		LBS mode		
		Altitude(m)		
		Frame master and slave settings		
		Number of basic modules in the frame		
		Number of redundant modules in the frame		
		Intelligent parallel sleep mode		
		Charger sleep		
		Charger sleep time (d)		
		Bypass overload		
		Short circuit action		
		EPO action		
		EPO function		
		Impact to bypass		
		Forced bypass		
		Unified System EPO action		
		Unified System ON/OFF		
	Warranty	Battery warranty	Installation time	
			Expire time	Warranty time (year)
		UPS warranty	Installation time	
			Expire time	Warranty time (year)

Appendix 2 Alarm List

Alarm code	Alarm description	Cause	Corrective action
99	BMS communication abnormal	Communication between UPS and lithium battery failed	Check whether the communication cable is normal, reconnect the communication cable.
100-102	Input overvoltage	Abnormally high input voltage	Check the mains input voltage
103-104	Input undervoltage	Abnormally low input voltage	Check the mains input voltage
106	Input over-frequency	Abnormal input frequency	Check the mains input frequency
107	Input under-voltage	Abnormal input frequency	Check the mains input frequency
108	Input phase sequence reversed	Input phase sequence reversed	Check mains input cables
109	Input voltage unbalanced	Input voltage unbalanced	Check the mains input voltage
110	Input current unbalanced	Input current unbalanced	Replace the power unit or the module
124	Input phase loss	Input phase loss	Check the mains input voltage
125	Input neutral wire disconnected	Input zero line not connected	Check for excessive unbalanced load
126	Input overload	Input overload	Check for excessive load
200	Positive bus overvoltage	Positive bus voltage over the overvoltage setting value	If the mains input or bypass input voltage is too high, after the voltage returns to normal, clear the failure, and then restart. If the voltage is still too high, replace the power unit or the module.
201	Negative bus overvoltage	negative bus voltage over the overvoltage setting value	
202	Bus overvoltage	Bus voltage over the overvoltage setting value	
203	Positive bus undervoltage	Positive bus voltage below the undervoltage setting value	Replace the power unit or the module
204	Negative bus undervoltage	Negative bus voltage below the undervoltage setting value	Replace the power unit or the module
206	Positive and negative bus voltage unbalanced	Voltage difference between positive and negative bus over the setting value	Replace the power unit or the module
207	Bus hardware overvoltage fault	Bus voltage over setting value of hardware overvoltage	Replace the power unit or the module
210	BUS overvoltage times to	Bus overvoltage over setting value	Replace the power unit or the module
211	Bus capacitance lifetime less than 1 year	Less than 1 year service life of bus capacitor	Replace the power unit or the module

Alarm code	Alarm description	Cause	Corrective action
212	Positive bus instantaneous undervoltage	Positive bus voltage below undervoltage setting value	Replace the power unit or the module
213	Negative bus instantaneous undervoltage	Negative voltage below undervoltage setting value	Replace the power unit or the module
218	Bus short circuit	Bus short circuit	Check bus connection, or replace the power unit or the module
219	Bus soft-start times to	Bus soft start times over set times	Replace the power unit or the module
300	Battery overtemperature	Battery temperature reaching battery overtemperature alarm point	Check whether the battery cables are loose Check whether the battery voltage or current conforms to the parameters in the battery manual Strengthen the environment ventilation of battery room Improve the grid environment
301	Battery self-check failure	Battery self-inspection failed	Check if the set number of battery is correct Replace the power unit or the module
302	Battery overvoltage	Battery voltage reaching battery over-voltage protection point	Check if the set number of battery is correct Replace the power unit or the module
303	Battery undervoltage (DOD)	Battery undervoltage alarm	Check whether the main circuit voltage is abnormal for a long time Check for overload
304	Battery undervoltage (EOD）	Battery voltage reaching EOD voltage value due to continuous discharging of battery	Check the mains supply and charge the battery in time
305/309	Battery overcharge	Charger failed	Replace the power unit or the module
322	Battery charge overcurrent	Charger failed	Check whether the set number of batteries is consistent with the actual number of batteries, or otherwise replace the power unit or the module
323	Battery discharge overcurrent	Battery discharge overcurrent	Check whether heavy loads are powered weak batteries and "troubleshoot" after load relief If not, replace the power unit or the module

Alarm code	Alarm description	Cause	Corrective action
324	Battery discharging voltage expired	Battery voltage reaching EOD voltage value due to continuous discharging of battery	Check the mains supply and charge the battery in time
325	Battery discharging time expired	Time continuous discharging of battery over discharging protection time	Check the mains supply and charge the battery in time
330	Backup time warning	Battery standby time failing to reach expected standby time	Check the mains supply and charge the battery in time Check battery configuration capacity
331	Remain capacity warning	Remaining capacity failing to expected remaining capacity	Check the mains supply and charge the battery in time Check battery configuration capacity
332	Battery maintenance reminding	Maintenance period exceeded after the previous battery maintenance	Confirm battery maintenance tips after battery maintenance
336	Battery fuse fault	Battery fuse failure	Check the battery fuse for damage
338	Battery connection abnormal	Battery reversal	Confirm the battery installation polarity and reinstall
339		Battery not connected	Check whether the battery port voltage is normal and whether the battery is installed properly Check that the battery fuse is normal
357	Battery low temperature	Too low ambient temperature of battery room	Raise the ambient temperature of the battery room
320	Charger overvoltage	Charger overvoltage	Check whether the number of batteries is set correctly, and "troubleshoot" after confirmation. If the failure is not removed, replace the power unit or the module
321	Charger undeervoltage	Charger undervoltage	
322	Charger overcurrent	Charger overcurrent	Replace the power unit or the module
335	Charer soft-start failure	Charger soft start failed	Replace the power unit or the module
346	Charger brearker short circuit	Charger switch shorted	Replace the power unit or the module
347	Charger brearker open circuit	Charger switch opened	Check whether the difference between the charging voltage and the battery voltage is within the error range. If it is beyond the error range, re-calibrate charging voltage and battery voltage Replace the power unit or the module
348	Charger overtemperature	Charger overtemperature	Check the fan and turn off the charger

Alarm code	Alarm description	Cause	Corrective action
349-350	Charger hardware overvoltage fault	Charger hardware overvoltage fault	Check whether the number of batteries is set correctly, and "troubleshoot" after confirmation. If the failure is not removed, replace the power unit or the module
351-352	Charger hardware wave-by-wave current-limiting alarm	Wave-by-wave current limit alarm of charger hardware	
353-354	Charger hardware wave-by-wave current-limiting fault	Wave-by-wave current limit failure of charger hardware	Replace the power unit or the module
363	Lithium battery charging primary protection	Lithium battery charging primary protection triggered	Check whether the lithium battery is normal, check whether the lithium battery setting is normal, if the fault does not disappear, replace the damaged lithium battery string or pack
364	Lithium battery discharging primary protection	Lithium battery discharging primary protection triggered	Check whether the lithium battery is normal, check whether the lithium battery setting is normal, if the fault does not disappear, replace the damaged lithium battery string or pack
365	Lithium battery charging secondary protection	Lithium battery charging secondary protection triggered	Check whether the lithium battery is normal, check whether the lithium battery setting is normal, if the fault does not disappear, replace the damaged lithium battery string or pack
366	Lithium battery discharging secondary protection	Lithium battery discharging secondary protection triggered	Check whether the lithium battery is normal, check whether the lithium battery setting is normal, if the fault does not disappear, replace the damaged lithium battery string or pack
367	Lithium battery charging three-level protection	Lithium battery charging three-level protectiontriggered	Check whether the lithium battery is normal, check whether the lithium battery setting is normal, if the fault does not disappear, replace the damaged lithium battery string or pack
368	Lithium battery discharging three-level protection	Lithium battery discharging three-level protection triggered	Check whether the lithium battery is normal, check whether the lithium battery setting is normal, if the fault does not disappear, replace the damaged lithium battery string or pack

Alarm code	Alarm description	Cause	Corrective action
369	Lithium battery charging warning	Lithium battery charge alarm triggered	Check whether the lithium battery is normal, check whether the lithium battery setting is normal, if the fault does not disappear, replace the damaged lithium battery string or pack
370	Lithium battery discharging warning	Lithium battery discharge alarm triggered	Check whether the lithium battery is normal, check whether the lithium battery setting is normal, if the fault does not disappear, replace the damaged lithium battery string or pack
406-411	Rectifier hardware wave-by-wave current-limiting alarm	Wave-by-wave current limit alarm of rectifier hardware	Check for excessive load or transient load
412-417	Rectifier hardware overvoltage fault	Overcurrent failure of rectifier hardware	Check for excessive load, otherwise replace the power unit or the module
418-423	Rectifier overcurrent	Rectifier overcurrent	Replace the power unit or the module
424-429	Rectifier hardware wave-by-wave current-limiting fault	Wave-by-wave current limit alarm of charger hardware	Check for excessive load, otherwise replace the power unit or the module
430	Bus hardware soft-start failure	Soft start failed of bus hardware	Replace the power unit or the module
447	Rectifier overcurrent in battery mode	Overcurrent of rectifier battery mode	Replace the power unit or the module
448	Rectifier overcurrent in mains mode	Overcurrent of rectifier mains mode	Replace the power unit or the module
500-505	PFC IGBT module overtemperature	Rectifier IGBT module over-temperature	Check whether the fan is normal or the ambient temperature is too high or it runs at one above the full load power for long time
506	E2PROM read-write failure	E2PROM read/write failure	Replace the power unit or the module
507	PFC DSP and monitoring communication failure	Communication between rectifier DCP and monitor failed	Check whether the communication cables are connected properly Replace the power unit or module or monitoring unit
508	PFC DSP and CPLD communication failure	Communication between rectifier CPLD and monitor failed	Replace the power unit or the module

Alarm code	Alarm description	Cause	Corrective action
509-511	Fan fault	Fan failed	Check whether the fan is blocked. If so, restore the fan to normal operation. Otherwise, replace the power unit
512	Rectifier APS abnormal	Abnormal auxiliary power supply of rectifier	Replace the power unit or the module
515	PFC contactor fault	Rectifier contactor failed	Replace the power unit or the module
516	CPLD software version abnormal	Abnormal CPLD software version	Load the software
517	DSP software version abnormal	Abnormal DSP software version	
518	PFC software version and hardware mismatching	Rectifier software version unmatched with the hardware version	
520	PFC emergency stop	Emergency shutdown of rectifier	Check the status of the emergency shutdown button, troubleshooting
525	SPI communication fault among rectifier and inverter	SPI communication failure between rectifier and inverter	Replace the power unit or the module
600-602	Bypass overvoltage	Bypass overvoltage	Check the bypass input voltage or wiring Check whether the voltage system and upper and lower limits of bypass voltage are reasonable
603-605	Bypass undervoltage	Bypass undervoltage	Check the bypass input voltage or wiring Check whether the voltage system and upper and lower limits of bypass voltage are reasonable
607	Bypass over-frequency	Bypass over-frequency	Check the bypass input frequency Check whether the rated frequency and frequency range settings are reasonable
608	Bypass under-frequency	Bypass under-frequency	Check the bypass input frequency Check whether the rated frequency and frequency range settings are reasonable
617	Bypass phase sequence reversed	Bypass phase sequence reversed	Check three-phase bypass input wiring
619-621	Bypass open circuit faul	Bypass SCR opened	Replace the power unit or the module
622-624	Bypass SCR short circuit fault	Bypass SCR shorted	
625-626	Bypass APS fault	Auxiliary power failure of bypass	Manually remove Replace the bypass unit

Alarm code	Alarm description	Cause	Corrective action
627	Bypass overload （125%）	Bypass overload 125% time out	Check whether the load is too large Check whether the module is derated due to fan failure If no, replace the power unit or the module
629	Bypass overload （150%）	Bypass overload 150% time out	
647	Bypass overload （200%）	Bypass overload 200% time out	
655	Bypass overload alarm	Bypass with bypass overload alarm	automatically clear after load reduction
631	Bypass DSP and monitoring communication failure	Communication between bypass DSP and monitor failed	Replace bypass unit or monitoring module
633	Bypass DSP software version abnormal	Abnormal bypass DSP software version	Load the software
635	Bypass software version and hardware version mismatching	Bypass software version unmatched with hardware version	
636	Bypass E2PROM operation failure	Bypass E2PROM operation failed	Replace bypass unit or module
644-646	Bypass overtemperature	Bypass overtemperature	Check whether the bypass output is overcurrent. If yes, lower the load Check whether the fan duct is blocked. If yes, remove the obstruction Check whether the fan is blocked. If yes, restore the fan to normal operation. Otherwise, replace the power unit
656-658	ECO bypasss overvoltage	ECO bypass overvoltage	Check the bypass input voltage or wiring Check whether the voltage system and upper and lower limits of bypass voltage are reasonable
659-661	ECO bypasss undervoltage	ECO bypass undervoltage	Check the bypass input voltage or wiring Check whether the voltage system and upper and lower limits of bypass voltage are reasonable
662	ECO bypass over-frequency	ECO bypass overfrequency	Check the bypass input frequency Check whether the rated frequency and frequency range setting are reasonable
663	ECO bypass under-frequency	ECO bypass underfrequency	Check the bypass input frequency Check whether the rated frequency and frequency range setting are reasonable
707	Output overload 105%	Output overload 105% time out	Check whether the load is too large Check whether the module is derated

Alarm code	Alarm description	Cause	Corrective action
708	Output overload 110%	Output overload 105% time out	due to fan failure If no, replace the power unit or the module
709	Output overload 125%	Output overload 125% time out	
710	Output overload 150%	Output overload 150% time out	
721	Output overload alarm	Output overload alarm	automatically clear after load reduction
800-802	Inverter overvoltage	Inverter overvoltage	Replace the power unit or the module
803-804	Inverter undervoltage	Inverter undervoltage	Replace the power unit or the module
806	Inverter voltage unbalanced	Inverter voltage unbalance	Replace the power unit or the module
807-809	DC components too large (RST)	Oversize DC component (R S T)	First check whether the load is a special load (such as half-wave load). If the load is normal, replace the power unit or the module
901	Inverter phase-lock failure	Phase lock failure of inverter	Replace the bypass unit or module
902	Bypass and inverter switching frequently	Switching frequently between bypass and inverter	Check the quality of the bypass power system, and clear the faults automatically Otherwise, replace the power unit or the module
903	Inverter soft-start times to	Inverter soft start times reached	Replace the power unit or the module
904	Parallel equalized current abnormal	Abnormal even current of parallel operation	Replace the power unit or the module
905	Inverter self-check failure	Inverter self-inspection failed	Replace the power unit or the module
1000-1005	Inverter radiator overtemperature	Temperature of inverter heat sink over setting value	Check whether the bypass output is overcurrent. If yes, lower the load Check whether the fan duct is blocked. If yes, remove the obstruction Check whether the fan is blocked. If yes, restore the fan to normal operation. Otherwise, replace the power unit
1006-1013	Inverter hardware overcurrent fault	Overcurrent failure of inverter hardware	Check whether the load is too large, and the large nonlinear load is applied transiently, if the load is normal, replace the power unit or the module

Alarm code	Alarm description	Cause	Corrective action
1022-1024	Inverter output short circuit	Inverter output shorted	Check whether the output end is shorted, if yes, replace the power unit; If no, check the load cable.
1026	Inverter power supply abnormal	Abnormal inverter power supply	Manually clear Replace the power unit or the module
1027	Inverter contactor fault	Inverter contactor failed	Replace the power unit or the module
1028	Inverter CPLD software version abnormal	Communication between inverter DSP and monitor	Check if the CCB communication line is connected properly, otherwise replace the power unit or monitoring unit
1029	Inverter DSP software version abnormal	Communication between inverter DSP and system board	Check if the CCB communication line is connected properly, otherwise replace the power unit or monitoring unit
1030	Inverter CPLD software version abnormal	Abnormal inverter CPLD software version	Load the software
1031	Inverter DSP software version abnormal	Abnormal inverter DSP software version	
1032	Inverter software version and hardware version mismatching	Inverter software version unmatched with hardware version	
1033	Inverter E2PROM operation failure	Inverter E2PROM operation failed	Replace the power unit or the module
1034	Inverter DSP and monitoring communication failure	Communication between Inverter DSP and CPLD failed	Replace the power unit or the module
1036-1038	Inverter fuse fault	Inverter fuse failed	Check the inverter fuse for damage
1039	Emergency stop	Emergency shutdown of inverter	Check the status of the emergency shutdown button, troubleshooting
1014-1019	Inverter hardware wave-by-wave current-limiting alarm	Wave-by-wave current limit alarm of inverter	Check whether the load is too large, and the large nonlinear load is applied transiently, if the load is normal, replace the power unit or the module
1048-1053	Inverter hardware wave-by-wave current-limiting fault	Wave-by-wave current limit failure of inverter	Check whether the load is too large, and the large nonlinear load is applied transiently, if the load is normal, replace the power unit or the module

Alarm code	Alarm description	Cause	Corrective action
1056	Inverter module overload (105%）	Inverter module overload 105% time out	Check whether the load is too large Check whether the module is derated due to fan failure If no, replace the power unit or the module
1057	Inverter module overload (110%）	Inverter module overload 110% time out	
1058	Inverter module overload (125%）	Inverter module overload 125% time out	
1059	Inverter module overload (150%）	Inverter module overload 150% time out	
1072	Inverter module overvoltage alarm	Inverter load over full-load power alarm	automatically clear after load reduction
1068	Synchronized method abnormal	Abnormal synchronous square wave	Check whether the connection of synchronous square wave signal line is normal Replace the power unit or the module
1069	Inverter contactor open circuit fault	Inverter relay open-circuit fault	Replace the power unit or the module
1070	Inverter contactor short circuit fault	Inverter relay short-circuit fault	
1080	Load impact	Load impact	Check whether the large nonlinear load is applied transiently Check output load for short circuit If the load is normal, replace the power unit or the module
1100	System board and inverter module CAN communication abnormal	Abnormal communication between system board and inverter module CAN	Check whether the communication line connection between the system and the inverter module is normal
1101	Multiple inverter addresses identical	Same address of multiple inverters	Check whether the address settings of each inverter module are conflict
1109	System self-check failure	System self-inspection failed	Replace the power unit or the module
1111	Load impact to bypass	Load impact switching to bypass	Check whether the large nonlinear load is applied transiently Check output load for short circuit If the load is normal, replace the power unit or the module
1200	CAN communication abnormal among system boards	Abnormal communication between system board and CAN	Check whether the communication line connection between system boards is normal
1201	System overload (105%)	System overload 105% time out	Check whether the load is too large Check whether the module is derated

Alarm code	Alarm description	Cause	Corrective action
1202	System overload (110%)	System overload 110% time out	due to fan failure If no, replace the power unit or the module
1203	System overload (125%)	System overload 125% time out	
1204	System overload (150%)	System overload 125% time out	
1205	System overload alarm	System load over designed full load of system	automatically clear after load reduction
1317	Neighbor requests to bypass	Adjacent machine requesting change to bypass	Check the adjacent machine for request cause
1329	Repeatedly transfer to bypass	Bypass locked due to repeated switching	Check whether the transient load is applied frequently, lock delay time to auto clearance
1330	Repeatedly transfer to inverter	Inverter locked due to repeated switching	Check whether the transient load is applied frequently, lock delay time to auto clearance

Appendix 3 Abbreviations

A	
AC	Alternating Current
AWG	American Wire Gauge
C	
CAN	Controller Area Network
CE	Conformite Europeenne
D	
D.G.	Diesel Generator
DC	Direct Current
DSP	Digital Signal Processing
E	
ECM	Energy Control Module
ECO	Economy Control Operation
EMC	Electro Magnetic Compatibility
EOD	End Of Discharge
EPO	Emergency Power Off
H	
HMI	Human Machine Interface
I	
IDC	Internet Data Center
IEC	International Electrotechnical Commission
IP	Internet Protocol
L	
LBS	Load Bus Sync
LCD	Liquid Crystal Display
LED	Light Emitting Diode
P	
PCB	Printed Circuit Board
PDC	Power Distribution Cabinet
PE	Protective Earthing
R	
RS485	Recommend Standard 485
S	
SNMP	Simple Network Management Protocol
STS	Static Transfer Switch
SN	Serial Number
T	
THDi	Total Harmonic Distortion Rate Of Current
THDu	Total Harmonic Distortion Rate Of Voltage
U	
UI	User Interface
UPS	Uninterruptible Power System
V	
VRLA	Valve Regulated Lea

Software Download & Installation

（Only for the model with communication port）

Please follow steps below to download and install monitoring software :

1 . Go to the website https://tools.powerchange.top

2 . Click UPSSmartView software icon and then choose your required OS to download the software

3 . Follow the on-screen instructions to install the software